PART MANIPULATOR
MODEL: PM–33–A2
MAX LIFTING CAPACITY 150 LBS.

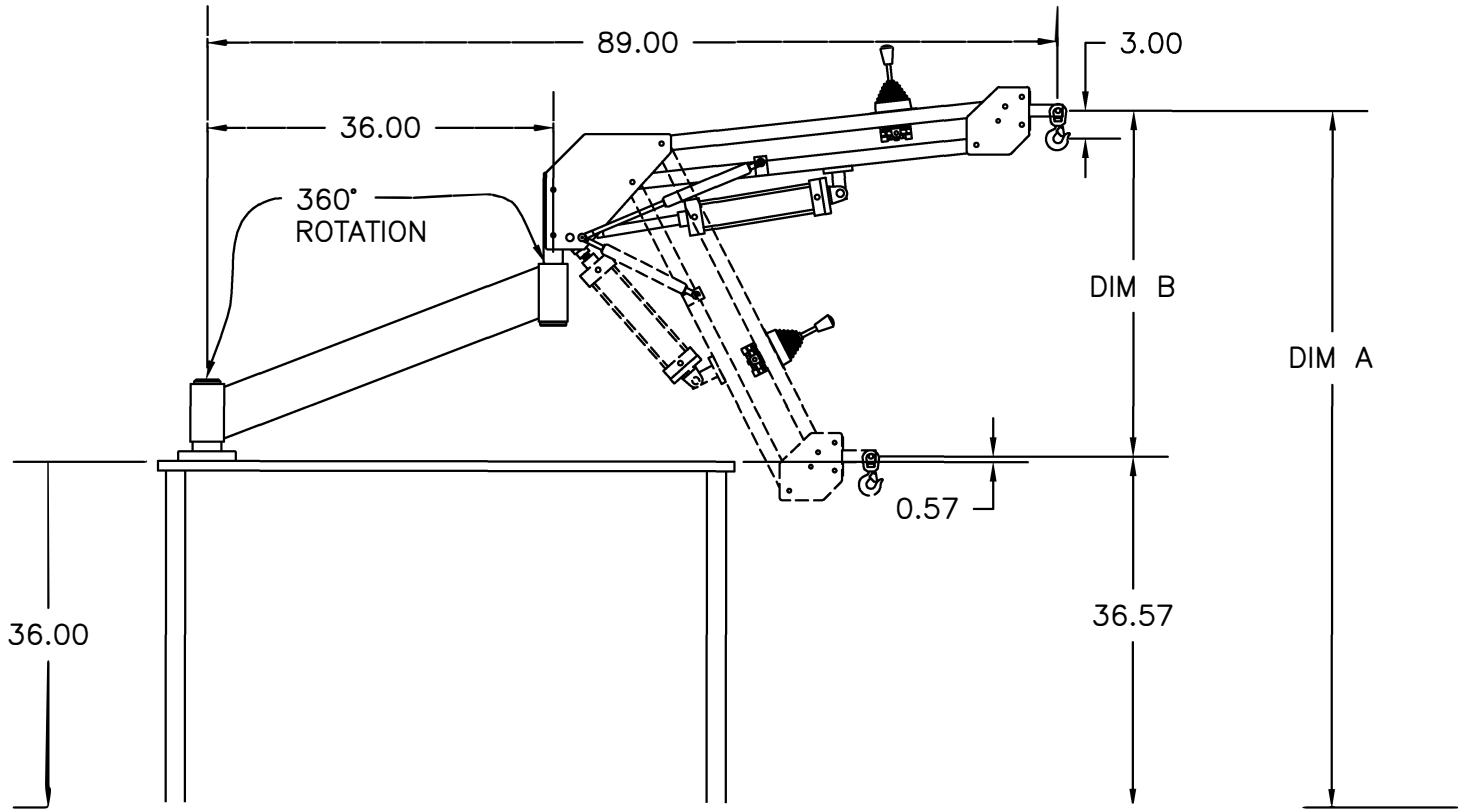

The pneumatic cylinder will require a minimum of 90 psi. to perform the lifting operation. The lifting height is dependent on the load & air pressure. (see chart) The part manipulator is capable of using air at 135 psi maximum if available.

LOAD lbs	PRESSURE psi	DIM A in	DIM B in
150	120	68	32
150	90	63	27
144	120	72	36
144	90	64	28
90	120	74	38
90	90	73	37

SYM.	Revision Record	Date	DWR.

Date:	Scale:	Drawn By:	Option No
5–16–12	.05=1.00	ETS	

Name: PART MANIPULATOR 33 ANGLE & DIMENSIONS

Material Specs: SEE PART DRAWINGS

Ergonomic Partners | Part No: 360222