MAGNETEK
MATERIAL HANDLING

Product Transition Guide
P3 Series 2 to G+ Mini

G+ Mini Transition Guide

Page Intentionally Left Blank

1.1 Overview 4
1.2 Drive Replacement Checklist 4
1.3 Ratings Summary 6
1.4 Terminals 7
Main Circuit Terminals 7
Control Terminals, Signal Levels 7
Network Communications Terminals 8
Terminal Size / Electric Wire Differences 9
Control Terminal Sizes and Wire Sizes 11
1.5 Dimensions, Installation Space and Substitution Material 12
P3 Series 2 Dimensions & Drive Ratings....12
G+ Mini Dimensions & Drive Ratings 13
1.6 Parameter Correspondence Table 16
P3 Series 2 and G+ Mini Differences in Parameter Settings 17
P3 Series 2 and G+ Mini Parameter Correspondence for Drive Replacement 16
1.7 Appendix 20
P3 Series 2 and G+ Mini Differences in Watts Loss 20
P3 Series 2 and G+ Mini Specification Differences 21

1.1 Overview

This purpose of this document is to provide an easy transition from the P3 Series 2 (N060 = 00) to the G+ Mini (A01.01 = 1). For the advanced portion (A01.02 = 2), please refer to the G+ Mini Advanced instruction manual (P/N 144-25084).

1.2 Drive Replacement Checklist

	Item	Checkpoints	Checked?
Hardware	**Basic**	• Check if the new drive dimensions are bigger than the current drive. Can the mounting holes be used? – Verify that the existing dimensions reference in Section 1.5, "Dimensions, installation space and substitution material" of this manual compares the sizes of the current and new unit. If a mechanical substitution kit is necessary, it is referenced in Section 1.5.	
		< <u>Digital operator</u> > • Was a remote operator connected to the current unit? – If so, do not attempt to connect the P3 Series 2 remote operator to the G+ Mini, as they are incompatible. – The digital operator for the G+ Mini can not be mounted remotely.	
	Main and Control Terminals	**< <u>Wire Length</u> >** • In the replacement drive, the main and control circuit terminals may be mounted in different positions. Check to ensure all cables are long enough to be connected to the new unit.	
		< <u>Main circuit wires and terminal specifications</u> > • Compare the occupied terminals of the current unit with the new drive's terminals (shape, size, etc.), and verify that the wires fit in the new unit's terminals, using Section 1.4 "Terminals", specifically "Control Terminal Sizes and Wire Sizes" of this document.	
Software	**Parameter**	**< <u>Check the parameter settings</u> >** • Read the parameter settings of the current unit and perform a parameter conversion to the new parameters following Section 1.6 "Parameter Correspondence Table", specifically "P3 Series 2 and G+ Mini Differences in Parameter Settings" of this document. – If there is special software installed or parameters appear that are not mentioned in this document, contact your Magnetek representative.	

	Item	Checkpoints	Checked?
Options, Others	**Option Cards**	< **Is an option card installed?** > • Check if any option card is installed. – If an option card is installed, get the equivalent option card for the G+ Mini. – Never attempt to apply P3 Series 2 option cards to the G+ Mini unit. – The option card on the G+ Mini may have another connector on the P3 Series 2. Make sure that the connectors fit into the new option card before using it.	
	Others	< **Is a braking resistor installed?** > • Check if a braking resistor is installed on the current drive. – Inspect the braking resistor for physical damage or wear before connecting it to the new drive. – Connect the braking resistor to the equivalent terminals on the new unit. – The terminals might have a different location in the new drive; check to ensure that existing wiring is long enough to reach the new terminal location.	
		< **Is a braking unit installed?** > • Check if a braking unit is used in the current installation. – Inspect the braking unit for physical damage or wear before connecting it to the new drive. – Connect the braking unit to the equivalent terminals on the new unit. – The terminals might have a different location in the new drive; check to ensure that existing wiring is long enough to reach the new terminal location.	
		< **Is an AC reactor or DC choke installed?** > • Check if an AC reactor or DC choke is used in the current installation. – Inspect the reactor or choke for physical damage or wear before connecting it to the new drive. – Make sure that the reactor or choke data are appropriate for the replacement drive. – The terminals might have a different location in the new drive; check to ensure that existing wiring is long enough to reach the new terminal location.	

• Refer to the instruction manual for questions about installation, parameter settings or detailed parameter/function descriptions.

1.3 Ratings Summary

The following table summarizes the output current ratings for the G+ Mini and P3 Series 2 with respect to the specific drive model.

Rated Input Voltage	P3 Series 2 Drive Model Number	Heavy Duty		G+ Mini Drive Model Number	Heavy Duty	
		Rated Output Current (Amps)	Nominal HP		Rated Output Current (Amps)	Nominal HP
200V, 3-Phase	**2001-P3S2** **2003-P3S2**	1.6 3.0	1/4 1/2	**2001-G+M** **2003-G+M**	1.6 3.0	1/4 1/2
	2005-P3S2 **2008-P3S2**	5.0 8.0	3/4 & 1 2	**2005-G+M** **2008-G+M**	5.0 8.0	3/4 & 1 2
	2011-P3S2 **2017-P3S2**	11.0 17.5	3 5	**2011-G+M** **2017-G+M**	11.0 17.5	3 5
	2025-P3S2 **2033-P3S2**	25.0 33.0	7.5 10	**2025-G+M** **2033-G+M**	25.0 33.0	7.5 10
	N/A **N/A**	N/A N/A	N/A N/A	**2047-G+M** **2060-G+M**	47.0 60.0	15 20
400V, 3-Phase	**4001-P3S2** **4002-P3S2**	1.2 1.8	1/2 3/4	**4001-G+M** **4002-G+M**	1.2 1.8	1/2 3/4
	4003-P3S2 **4004-P3S2**	3.4 4.8	1 & 2 3	**4003-G+M** **4004-G+M**	3.4 4.8	1 & 2 3
	4008-P3S2	8.6	5	**4009-G+M**	9.2	5
	4014-P3S2 **4018-P3S2**	14.8 18.8	7.5 & 10 10	**4014-G+M** **4018-G+M**	14.8 18.0	7.5 & 10 10
	N/A **N/A**	N/A N/A	N/A N/A	**4024-G+M** **4031-G+M**	24.0 31.0	15 20

1.4 Terminals

Main Circuit Terminals

- As the P3 Series 2 and G+ Mini may have different terminals sizes (depending on capacity), the terminals must be carefully checked before replacement.
- The main terminal functionality has not been changed between the P3 Series 2 and the G+ Mini drive.

Main Terminals		Note
P3 Series 2	G+ Mini	
R/L1	R/L1	Power supply connection
S/L2	S/L2	
T/L3	T/L3	
U/T1	U/T1	Drive output
V/T2	V/T2	
W/T3	W/T3	
B1	B1	Braking resistor or external braking unit connection
B2	B2	Braking resistor connection
+1	+1	DC Choke connection, DC power supply input
+2	+2	DC Choke connection
—	—	DC power supply input, external braking unit connection
⏚	⏚	Ground

Control Terminals, Signal Levels

- The P3 Series 2 and G+ Mini initial settings for terminal function are shown below.
- "—" indicates that an equivalent terminal on the other unit does not exist.

Control Terminals		Function	Signal Level	
P3 Series 2	G+ Mini		P3 Series 2	G+ Mini
S1		Multi-Function input 1 (1: Run forward 0: Stop)	120 VAC (Photocoupler 24 VDC, 8A isolation*)	120 VAC (Photocoupler 24 VDC, 8A isolation*)
S2		Multi-Function input 2 (1: Run reverse 0: Stop)		
S3		Multi-Function input 3 (External fault)		
S4		Multi-Function input 4 (Fault reset)		
S5		Multi-Function input 5 (Multi-step speed 1)		
S6		Multi- Function input 6 (Multi-step speed 2)		
S7		Multi-Function input 7 (JOG reference)		
X2	(SC*)	Multi-Function input common	0V	0V
RP		Pulse input (frequency reference)	Frequency range: 1.0~32 kHz	Frequency range: 0.5~32 kHz

* *With 120 VAC interface card removed*

Control Terminals		Function	Signal Level	
P3 Series 2	G+ Mini		P3 Series 2	G+ Mini
FS	+V	Analog input power supply	+12 V (max. current 20 mA)	+10.5 V (max. current 20 mA)
FR	A1	Analog input 1 Voltage or current (not available on G+ Mini - see Note) input (frequency reference)	0~+10 VDC (20 kW), 0 or 4~20 mA (250 kW)	0~+10 VDC (20 kW)
—	A2	Analog input 2 (frequency reference)	—	DC:0~+10 V (20 kΩ) 0 or 4~20 mA (250 kΩ) (initial setting: 4-20 mA)
FC	AC	Analog input common	0 V	
—	HC	Hard wire baseblock common	—	+24 V (max. current 10 mA)
—	H1	Hard wire baseblock input (EN954-1, category 3, Stop category 0)	—	Open: Stop Closed: Operation
MA		Multi-Function Digital Output (N.O. Contact) (Fault)	Max. AC load: 250 VDC, 1 A max. 30 VDC, 1 A max.	Max. load: AC:250 V, 10 mA~1 A DC:30 V, 10 mA~1 A
MB		Multi-Function Digital Output (N.O. Contact) (Fault)		
MC		Multi-Function Digital Output (common)		
P1		Open collector output 1 (during run)	Photocoupler +48 VDC, 50 mA or less Output	
P2		Open collector output 2 (speed agree)		
PC		Open collector output common		
—	MP	Pulse output (output frequency)	—	Max. 32 kHz
AM		Analog output	DC:0~+10 V, 2 mA max. Resolution: 8 bit	DC:0~+10 V, 2 mA max. Resolution: 1/1000
AC		Analog output GND		

Note: The current input for terminal A1 is not available on the G+ Mini. Use terminal A2 for current input.

Network Communications Terminals

- "–" indicates that an equivalent terminal on the other unit does not exist.

Serial Communication Terminals		Function	Signal Level	
P3 Series 2	G+ Mini		P3 Series 2	G+ Mini
R+	R+	Receive +	RS-485/422 MEMOBUS Protocol Max. 19.2 kbps	RS-485/422 MEMOBUS Protocol Max. 115.2 kbps
R-	R-	Receive -		
S+	S+	Transmit +		
S-	S-	Transmit -		
GND	IG	Shield connection, GND	0V	0V

Terminal Size / Electric Wire Differences - 3 Phase 200V Class

Drive Type		Terminal Symbol	P3 Series 2				G+ Mini			
P3S2	G+ Mini		Screw Size	Tightening Torque lb-in (N•m)	Applicable Wire Size AWG (mm^2)	Recom-mended Wire Size AWG (mm^2)	Screw Size	Tightening Torque lb-in (N•m)	Applicable Wire Size AWG (mm^2)	Recom-mended Wire Size AWG (mm^2)
2001 2003 2005	2001 2003 2005	R/L1,S/L2, T/L3,U/T1, V/T2,W/T3, -, +1, +2, B1, B2, ⏚	M3.5	7.1~8.9 (0.8~1.0)	18~14 (0.75~2.0)	14 (2)	M3.5	7.1~8.9 (0.8~1.0)	18~14 (0.75~2)	14 (2)
2008	2008	R/L1,S/L2, T/L3,U/T1, V/T2,W/T3, -, +1, +2,	M4	10.6~13.3 (1.2~1.5)	14~10 (2.0~5.5)	14 (2)	M4	10.6~13.3 (1.2~1.5)	14~10 (2.0~5.5)	14 (2)
		⏚				12 (3.5)			14~10 (2.0~5.5)	12 (3.5)
2011	2001	R/L1,S/L2, T/L3,U/T1, V/T2,W/T3, -, +1, +2, B1, B2, ⏚	M4	10.6~13.3 (1.2~1.5)	14~10 (2.0~5.5)	12 (3.5)	M4	10.6~13.3 (1.2~1.5)	14~10 (2.0~5.5)	12 (3.5)
2017	2017	R/L1, S/L2, T/L3,U/T1, V/T2,W/T3, -, +1, +2, B1, B2, ⏚	M4	10.6~13.3 (1.2~1.5)	14~10 (2.0~5.5)	10 (5.5)	M4	10.6~13.3 (1.2~1.5)	14~10 (2.0~5.5)	10 (5.5)
2025	2025	R/L1,S/L2, T/L3,U/T1, V/T2,W/T3, -, +1, +2, ⏚	M5	22.2 (2.5)	10~8 (5.5~8.0)	8 (8)	M5	17.7~22.1 (2~2.5)	10~6 (5.5~14)	8 (8)
		B1, B2,					M4	10.6~13.3 (1.2~1.5)	14~10 (2.0~5.5)	10 (5.5)
2033	2033	⏚	M5	22.2 (2.5)	10~8 (5.5~8.0)	8 (8)	M5	17.7~22,1 (2~2.5)	10~6 (5.5~14)	8 (8)
		R/L1,S/L2, T/L3,U/ T1,V/T2, W/ T3,-, +1, +2,								6 (14)
		B1, B2,					M4	10.6~13.3 (1.2~1.5)	14~10 (2.0~5.5)	10 (5.5)
	2047	⏚					M6	4~6 (35.4~53.1)	14~22 (6~4)	22 (4)
		R/L1, S/L2, T/L3, U/T1, V/T2, W/T3, -, +1, +2					M6	4~6 (35.4~53.1)	14~22 (6~4)	22 (4)
		B1, B2					M5	2~2.5 (17.7~22.1)	5.5~8 (10~8)	8 (8)

Drive Type		Terminal Symbol	P3 Series 2				G+ Mini			
P3S2	G+ Mini		Screw Size	Tightening Torque lb-in (N•m)	Applicable Wire Size AWG (mm^2)	Recom-mended Wire Size AWG (mm^2)	Screw Size	Tightening Torque lb-in (N•m)	Applicable Wire Size AWG (mm^2)	Recom-mended Wire Size AWG (mm^2)
	2060	⏚					M6	4~6 (35.4~53.1)	8~22 (8~4)	22 (4)
		R/L1, S/L2, T/L3, U/T1, V/T2, W/T3, -, +1, +2					M8	9~11 (79.7~11.0)	8~38 (8~2)	38 (2)
		B1, B2					M5	2~2.5 (17.7~22.1)	8~14 (8~6)	14 (6)

Terminal Size / Electric Wire Differences - 3 Phase 400V Class

Drive Type		Terminal Symbol	P3 Series 2				G+ Mini			
P3S2	G+ Mini		Screw Size	Tightening Torque lb-in (N•m)	Applicable Wire Size AWG (mm^2)	Recom-mended Wire Size AWG (mm^2)	Screw Size	Tightening Torque lb-in (N•m)	Applicable Wire Size AWG (mm^2)	Recom-mended Wire Size AWG (mm^2)
4001 4002 4003 4004	4001 4002 4003 4004	R/L1,S/L2, T/L3,U/T1, V/T2,W/T3, -, +1, +2, B1, B2 ⏚	M4	10.6~13.3 (1.2~1.5)	14~10 (2.0~5.5)	14 (2)	M4	10.6~13.3 (1.2~1.5)	14~10 (2.0~5.5)	14 (2)
4008	4009	R/L1,S/L2, T/L3,U/T1, V/T2,W/T3, -, +1, +2, B1, B2,	M4	10.6~13.3 (1.2~1.5)	14~10 (2.0~5.5)	14 (2)	M4	10.6~13.3 (1.2~1.5)	14~10 (2.0~5.5)	14 (2)
		⏚				12 (3.5)				12 (3.5)
4014	4014	⏚	M4	12.4 (1.4)	12~10 (3.5~5.5)	10 (5.5)	M5	17.7~22.1 (2.0~2.5)	10~6 (5.5~14)	10 (5.5)
		R/L1,S/L2, T/L3,U/T1, V/T2,W/T3, -, +1, +2, B1, B2,					M4	10.6~13.3 (1.2~1.5)	14~10 (2.0~5.5)	
4018	4018	R/L1,S/L2, T/L3,U/T1, V/T2,W/T3, -, +1, +2	M5	22.2 (2.5)	10~8 (5.5~8)	10 (5.5)	M5	17.7~22.1 (2.0~2.5)	10~6 (5.5~14)	8 (8)
		⏚								10 (5.5)
		B1, B2					M4	10.6~13.3 (1.2~1.5)	14~10 (2.0~5.5)	
	4024	R/L1, S/L2, T/L3, U/T1, V/T2, W/T3, -, +1, +2					M5	2~2.5 (17.7~22.1)	5.5~14 (10~6)	8 (8)
		⏚					M6	4~6 (35.4~53.1)	5.5~14 (10~6)	8 (8)
		B1, B2					M5	2~2.5 (17.7~22.1)	5.5~8 (10~8)	8 (8)
	4031	R/L1, S/L2, T/L3, U/T1, V/T2, W/T3, -, +1, +2					M5	2~2.5 (17.7~22.1)	5.5~14 (10~6)	14 (6)
		⏚					M6	4~6 (35.4~53.1)	5.5~14 (10~6)	8 (8)
		B1, B2					M5	2~2.5 (17.7~22.1)	5.5~8 (10~6)	8 (8)

Control Terminal Sizes and Wire Sizes

Terminals (New/Changed in G+ Mini)	P3 Series 2				G+ Mini			
	Screw Size	Tighten. Torque in-lbs (N•m)	Applicable Wire Size AWG (mm^2)	Recommended Wire Size AWG (mm^2)	Screw Size	Tighten. Torque in-lbs (N•m)	Applicable Wire Size AWG (mm^2)	Recommended Wire Size AWG (mm^2)
MA, MB, MC	M3	4.4~5.3 (0.5~0.6)	Stranded 20~16 (0.5~1.25) Solid 20~16 (0.5~1.25)	18 (0.75)	M3	4.4~5.3 (0.5~0.6)	Stranded 24~16 (0.25~1.25) Solid 24~16 (0.25~1.25)	18 (0.75)
S1-S7, P1, P2, SC, PC, R+, R-, S+, S-, FS (V+) FR (A1), (A2), FC (AC), AM, AC, RP (MP), (HC), (H1)	M2	1.9~2.2 (0.22~0.25)	Stranded 20~18 (0.5~0.75) Solid 20~16 (0.5~1.25)	18 (0.75)	M2	1.9~2.2 (0.22~0.25)	Stranded 24~18 (0.25~0.75) Solid 24~16 (0.25~1.25)	18 (0.75)

Terminal Comparisons

Note: Refer to G+ Mini Basic Instruction Manual (P/N 144-25084) for warnings, cautions and additional notes.

1.5 Dimensions, Installation Space and Substitution Material

IMPULSE® P3 Series 2 Dimensions & Drive Ratings

Voltage Class	Model	Max Full Load	Rated Hp. (Approx)	W (in)	H (in)	D (in)	W1 (in)	H1 (in)	d	Wt. LB.	Total Heat Loss
3 Phase 200 V	2001-P3S2	1.6	0.25	2.68	5.04	2.99	2.20	4.65	M4	1.55	18.0
	2003-P3S2	3.0	.5	2.68	5.04	4.25	2.20	4.65	M4	2.20	28.1
	2005-P3S2	5.0	1.0	2.68	5.04	5.04	2.20	4.65	M4	2.65	45.1
	2008-P3S2	8.0	2.0	4.25	5.04	5.16	3.78	4.65	M4	3.53	72.8
	2011-P3S2	11.0	3.0	4.25	5.04	5.51	3.78	4.65	M4	3.53	94.8
	2017-P3S2	17.5	5.0	5.51	5.04	5.63	5.04	4.65	M4	5.30	149.1
	2025-P3S2	25.0	7.5	7.09	10.24	6.70	6.46	9.61	M5	10.14	256.5
	2033-P3S2	33.0	10.0	7.09	10.24	6.70	6.46	9.61	M5	10.58	308.9
3 Phase 400 V	4001-P3S2	1.2	0.5	4.25	5.04	3.62	3.78	4.65	M4	2.65	23.1
	4002-P3S2	1.8	0.75	4.28	5.04	4.33	3.78	4.65	M4	2.65	30.1
	4003-P3S2	3.4	1.0/2.0	4.25	5.04	5.51	3.78	4.65	M4	3.75	54.9
	4004-P3S2	4.8	3.0	4.25	5.04	6.14	3.78	4.65	M4	3.75	75.7
	4008-P3S2	8.6	5.0	5.51	5.04	5.63	5.04	4.65	M4	5.30	117.9
	4014-P3S2	14.8	7.5	7.09	10.54	6.70	6.46	9.61	M5	10.14	256.5
	4018-P3S2	18.8	10.0	7.09	10.24	6.70	6.46	9.61	M5	10.58	308.9

IMPULSE® G+ Mini Dimensions & Drive Ratings

Voltage Class	Model	Max Full Load	Rated Hp (Approx)	W (in)	H (in)	D (in)	W1 (in)	H1 (in)	d	Wt. LB.	Total Heat Loss*
3 Phase 200V	2001-G+M	1.6	.25	2.68	5.04	2.99	2.20	4.65	M4	1.3	14.7
	2003-G+M	3.0	.5	2.68	5.04	4.25	2.20	4.65	M4	2.0	24.0
	2005-G+M	5.0	1	2.68	5.04	5.04	2.20	4.65	M4	2.4	36.7
	2008-G+M	8.0	2	4.25	5.04	5.08	3.78	4.65	M4	3.7	61.9
	2011-G+M	11	3	4.25	5.04	5.41	3.78	4.65	M4	3.7	81.3
	2017-G+M	17.5	5	5.51	5.04	5.63	5.04	4.65	M4	5.3	122.7
	2025-G+M	25.0	7.5	5.51	10.00	5.51	4.80	9.76	M5	8.4	248.5
	2033-G+M	33.0	10	5.51	10.00	5.51	4.80	9.76	M5	8.4	282.6
	2047-G+M	47.0	15	7.09	11.42	6.42	6.30	11.18	M5	12.1	389.7
	2060-G+M	60.0	20	8.66	13.78	7.36	7.56	13.23	M5	20.3	536.8
3 Phase 400V	4001-G+M	1.2	.5	4.25	5.04	3.19	3.78	4.65	M4	2.2	19.1
	4002-G+M	1.8	.75	4.25	5.04	3.90	3.78	4.65	M4	2.6	27.1
	4003-G+M	3.4	2	4.25	5.04	5.41	3.78	4.65	M4	3.7	38.3
	4004-G+M	4.8	3	4.25	5.04	6.06	3.78	4.65	M4	3.7	57.4
	4009-G+M	9.2	5	5.51	5.04	5.63	5.04	4.65	M4	5.3	97.1
	4014-G+M	14.8	7.5	5.51	10.00	5.51	4.80	9.76	M5	8.4	173.4
	4018-G+M	18.0	10	5.51	10.00	5.51	4.80	9.76	M5	8.4	219.4
	4024-G+M	24.0	15	7.09	11.42	5.63	6.30	11.18	M5	11.5	283.8
	4031-G+M	31.0	20	7.09	11.42	6.42	6.30	11.18	M5	12.1	344.3

** Heat loss for carrier frequency of 2.0 KHz (Heavy Duty)*

IMPULSE® P3 Series 2 Wiring Diagram

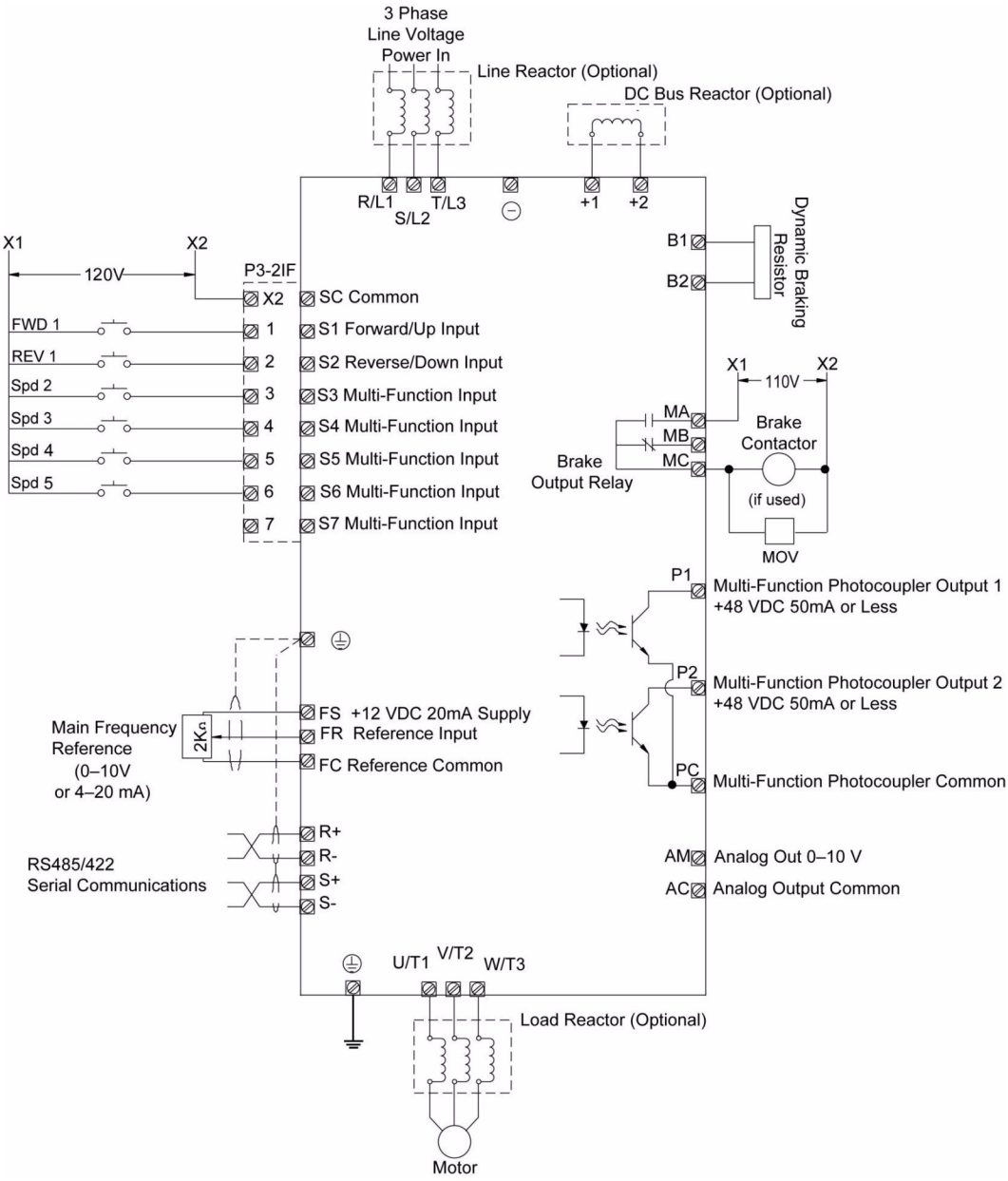

IMPULSE® G+ Mini Wiring Diagram

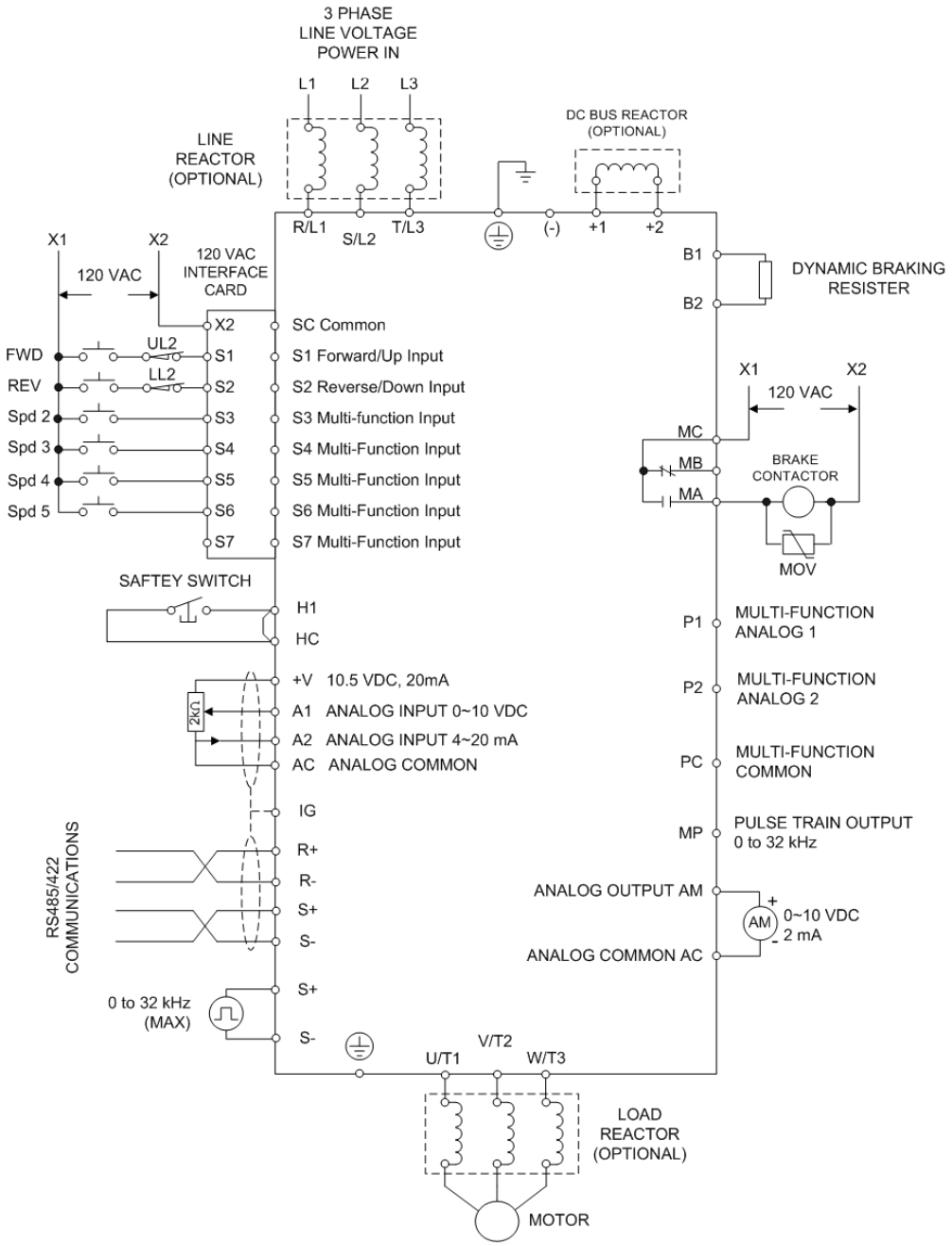

1.6 Parameter Correspondence Table

P3 Series 2 and G+ Mini Differences in Parameter Settings

The list in Section 1.6 shows the parameter relations between the P3 Series 2 and the G+ Mini. It lists the parameters and setting values necessary for P3 Series 2 replacement by a G+ Mini, but does not show the complete G+ Mini parameters and extended parameter setting ranges. For details about new functions, parameters and parameter settings refer to the instruction manual.

P3 Series 2→G+ Mini Parameter Correspondence for Drive Replacement

Drive / Parameter Function	P3 Series 2			G+ Mini			Note	
	Param. No.	Initial Value	Set Value	Param. No.	Initial Value	Set Value		
Motion Selection	n000	6		A01.03	1		**P3 Series 2**	**G+ Mini**
							n000→0~4	A01.03→0
							n000→5~9	A01.03→1
Speed Reference Selection				A01.04	1		n000→0~4	A01.04→0~4
							n000→5 n000→6 n000→7 n000→8 n000→9	A01.04→0 A01.04→1 A01.04→2 A01.04→3 A01.04→4
Initialize				A01.05	0		n000→0A	A01.05→2220
							n000→20	A01.05→9990
Motor Rated Current	n001	1[A]		E02.01	1[A]			
Access Level	n002	0		A01.01	1		**P3 Series 2**	**G+ Mini**
							n002→0~1	A01.01→0
							n002→2	A01.01→1
							n002→9,A	A01.01→3
Frequency Reference 1	n003	6.00[B]		B01.01	6.00[B]			
Frequency Reference 2	n004	30.00[B]		B01.02	30.00[B]			
Frequency Reference 3	n005	60.00[B]		B01.03	60.00[B]			
Frequency Reference 4	n006	0.00[B]		B01.04	45.00[B]			
Frequency Reference 5	n007	60.00[B]		B01.05	60.00[B]			
Acceleration Time 1	n008	5.0[B]		B05.01	5.0[B]			
Deceleration Time 1	n009	3.0[B]		B05.02	3.0[B]			
Special Functions	n010	0000		C01.01	0[B]		**P3 Series 2**	**G+ Mini**
							n010→xxx0 n010→xxx1	C01.01→0 C01.01→1
				C01.03	0		n010→xx0x n010→xx1x	C01.03→0 C01.03→1
				C06.01	0		n010→x0xx n010→x1xx	C06.01→0 C06.01→1
Acceleration Time 2	n011	2.5		B05.03	2.0			
Deceleration Time 2	n012	1.5		B05.04	2.0			

[A] - Initial value depends on the drive model number.

[B] - Value changes by X - press programming (A01.03)

Parameter Function \ Drive	P3 Series 2			G+ Mini			Note	
	Param. No.	Initial Value	Set Value	Param. No.	Initial Value	Set Value		
Run Signal Selection 1	n013	0101		B03.01	1		**P3 Series 2**	**G+ Mini**
							n013→xxx0 n013→xxx1	B03.01→0 B03.01→1
				B03.02	1		n013→xx0x n013→xx1x	B03.02→0 B03.02→1
				B03.03	1[B]		n013→x0xx n013→x1xx	B03.03→0 B03.03→1
Electronic Thermal Motor Protection	n014	0100		L01.01	1		**P3 Series 2**	**G+ Mini**
							n014→x000 n014→x010	L01.01→3
							n014→x100 n014→x110	L01.01→1 L01.01→2
							n014→x001 n014→x011 n014→x101 n014→x111	L01.01→0
				L09.01	1		n014→0xxx	L09.01→1 L09.05→E800
				L09.05	E000		n014→1xxx	L09.01→0
Number of Fault Retries	n015	3		L09.02	3			
Selection of Other Functions	n016	0101		L03.01	1		**P3 Series 2**	**G+ Mini**
							n016→xxx0 n016→xxx1	L03.01→0 L03.01→1
				H04.01[C]	102		n016→xx0x n016→xx1x	H04.01→102 H04.01→103
				D09.01 D09.02 D09.03 D09.04	0.50[B] 0.50[B] 0.50[B] 0.20		n016→00xx n016→10xx n016→01xx n016→11xx	D09.01~4→0.00 D09.01~4→0.20 D09.01~4→0.50 D09.01~4→1.00
Overtorque Detection Selection	n017	0000		L06.01	0		**P3 Series 2**	**G+ Mini**
							n017→x000 n017→x010 n017→x100 n017→x110	L06.01→0
							n017→x001	L06.01→1
							n017→x011	L06.01→2
							n017→x101	L06.01→3
							n017→x111	L06.01→4
Overtorque Detection Level	n018	100		L06.02	150			
Overtorque Detection Delay Time	n019	0.2		L06.03	0.1			
Swift Lift Frequency	n020	60		C06.02 C06.03	60.0 60.0			
Swift Lift Enabling Current at Forward	n021	50		C06.04	50			
Swift Lift Enabling Current at Reverse	n022	0		C06.05	30			

[B] - Initial value changes based on X-Press programming (A01.03)
[C] - This parameter is only accessible in Advanced mode.

Drive / Parameter Function	P3 Series 2			G+ Mini			Note
	Param. No.	Initial Value	Set Value	Param. No.	Initial Value	Set Value	
Swift Lift Delay Time at Threshold Speed	n023	0.2		C06.07	2.0		
Analog Frequency Reference Gain	n024	1.00		H03.03	100.0		
Analog Frequency Reference Bias	n025	0.00		H03.04	0.0		
DC Injection Braking Current	n026	50		D01.02	50		
DC Injection Time at Stop	n027	0.5		D01.04	0.05		
Torque Compensation Gain	n029	1.0		D03.01	1.00		
Stall Prevention at Accel	n030	170		L03.01	1		**P3 Series 2** / **G+ Mini** n030→30%~199% / L03.01→1 L03.02→n030
				L03.02	150		n030→200% / L03.01→0
Stall Prevention During Run	n031	160		L03.05	1		**P3 Series 2** / **G+ Mini** n031→30%~199% / L03.05→1 L03.06→n031
				L03.06	150		n031→200% / L03.05→0
Terminal S3 function selection	n032	0		H01.03[B]	0		**P3 Series 2** / **G+ Mini** n032~34→0 / H01.03~H01.05→0 n032~34→1 / H01.03~H01.05→1 n032~34→2 / H01.03~H01.05→2 n032~34→3 / H01.03~H01.05→4
Terminal S4 function selection	n033	1		H01.04[B]	1		n032~34→4 / H01.03~H01.05→5 n032~34→5 / H01.03~H01.05→13 n032~34→6 / H01.03~H01.05→3F n032~34→7 / H01.03~H01.05→1A n032~34→8 / H01.03~H01.05→32
Terminal S5 function selection	n034	5		H01.05[B]	0F		n032~34→9 / H01.03~H01.05→33 n032~34→A / H01.03~H01.05→4C n032~34→B~F / H01.03~H01.05→F n032~34→10~1F / H01.03~H01.05→20 n032~34→20 / H01.03~H01.05→3
Terminal MA, MB, MC function selection	n035	0		H02.01[B]	0		**P3 Series 2** / **G+ Mini** n035~37→0 / H02.01~03→0 n035~37→1 / H02.01~03→1
Terminal P1 function selection (Open collector)	n036	4		H02.02[B]	F		n035~37→2 / H02.01~03→4 n035~37→3 / H02.01~03→5 n035~37→4 / H02.01~03→B
Terminal P2 function selection (Open collector)	n037	5		H02.03[B]	F		n035~37→5 / H02.01~03→E
Fault History	n041	-	-	U02.02	-	-	In the G+ Mini the last fault can be traced in the U02.xx monitors.
Software Number	n042	-	-	U01.14	-	-	

[B] - Initial value changes based on X-Press programming (A01.03)

Drive / Parameter Function	P3 Series 2			G+ Mini			Note
	Param. No.	Initial Value	Set Value	Param. No.	Initial Value	Set Value	
Max. Output Frequency	n043	60.0		E01.04	60.0		
Max. Output Voltage	n044	230.0		E01.05	230.0[D]		
Max. Voltage Frequency	n045	60.0		E01.06	60.0		
Mid. Output Frequency	n046	3.0		E01.07	3.0[E]		
Mid. Output Frequency Voltage	n047	19.5		E01.08	19.5[D E]		
Min. Output Frequency	n048	1.5		E01.09	1.5[E]		
Min. Output Frequency Voltage	n049	12.6		E01.10	12.6[D E]		
Analog Frequency Reference Signal Selection	n050	0000		H03.09	2		**P3 Series 2** / **G+ Mini** n050→xxx0 n050→xxx1 / H03.09→0 (switch S1-2 must be in the OFF position) H03.09→2 (switch S1-2 must be in the ON position) n050→xx0x n050→xx1x / No Function n050→x0xx n050→x1xx / No Function n050→0xxx n050→1xxx / No Function
Analog Input Filter Time Constant	n051	0.10		H03.13	0.03		
Terminal S6 function selection	n052	0F		H01.06	0F		**P3 Series 2** / **G+ Mini** n032~34→0 / H01.03~H01.05→0 n032~34→1 / H01.03~H01.05→1 n032~34→2 / H01.03~H01.05→2 n032~34→3 / H01.03~H01.05→4 n032~34→4 / H01.03~H01.05→5 n032~34→5 / H01.03~H01.05→13
Terminal S7 function selection	n053	0F		H01.07	0F		n032~34→6 / H01.03~H01.05→3F n032~34→7 / H01.03~H01.05→1A n032~34→8 / H01.03~H01.05→32 n032~34→9 / H01.03~H01.05→33 n032~34→A / H01.03~H01.05→4C n032~34→B~F / H01.03~H01.05→F n032~34→10~1F / H01.03~H01.05→20 n032~34→20 / H01.03~H01.05→3
Basic/Advanced Parameter Switchover	n060	0		A01.01	1		**P3 Series 2** / **G+ Mini** n060→1 / A01.01→2 (See Advanced Manual if P3S2 was used in the advanced mode)

[D] - The value is for the 230 V class inverter value. For 460V class, the value is twice that of the 230V class.
[E] - Changing control mode changes factory setting. (V/f control is shown)

1.7 Appendix

P3 Series 2 and G+ Mini Differences in Watts Loss - Class D Operation

Voltage Class	Maximum Motor Power kW	P3 Series 2 Type	G+ Mini Type	P3 Series 2 @ 2.5 KHz			G+ Mini @ 2.0 KHz		
				Heatsink Loss (W)	Interior Unit Loss (W)	Total Loss (W)	Heatsink Loss (W)	Interior Unit Loss (W)	Total Loss (W)
3 Phase 200V	0.2	2001	2001	7.7	10.3	18.0	6.3	8.4	14.7
	0.4	2003	2003	15.8	12.3	28.1	13.2	10.8	24.0
	0.75	2005	2005	28.4	16.7	45.1	22.2	14.5	36.7
	1.5	2008	2008	53.7	19.1	72.8	41.5	20.4	61.9
	2.2	2011	2011	60.4	34.4	94.8	55.2	26.1	81.3
	3.7	2017	2017	96.7	52.4	149.1	85.6	37.1	122.7
	5.5	2025	2025	170.4	79.4	249.8	184.5	64.0	248.5
	7.5	2033	2033	219.2	98.9	318.1	206.6	76.0	282.6
	-	-	2047	-	-	-	283.4	106.3	389.7
	-	-	2060	-	-	-	393.2	143.6	536.8
3 Phase 400V	0.2	4001	4001	9.4	13.7	23.1	10.0	9.1	19.1
	0.4	4002	4002	15.1	15.0	30.1	15.6	11.5	27.1
	0.75	4003	4003	30.3	24.6	54.9	24.8	13.5	38.3
	1.5	4004	4004	45.8	29.9	75.7	39.1	18.3	57.4
	3.7	4008	4009	73.4	44.5	117.9	65.9	31.2	97.1
	5.5	4014	4014	168.8	87.7	256.5	119.0	54.4	173.4
	7.5	4018	4018	209.6	99.3	308.9	151.2	68.2	219.4
	-	-	4024	-	-	-	191.3	92.5	283.8
	-	-	4031	-	-	-	232.9	111.4	344.3

P3 Series 2 and G+ Mini Specification Differences

Category	Feature	Item	P3 Series 2	G+ Mini
Power Section	Control Method	–	Sinewave PWM: V/F & OLV	Sinewave PWM: V/F & OLV
	Ratings	230v, 3ph.	0.125 to 10 HP	0.125 to 20 HP
	Ratings	460v, 3ph.	0.5 to 10 HP	0.5 to 20 HP
	Maximum Output Frequency	–	400 Hz	400 Hz
	Carrier Frequency	–	10 kHz (model dependent)	HD: 2 kHz
	F_c Default (derate)	–	Constant	Swing PWM
	Braking Transistor Circuit	–	Built-in to 10 HP	Built-in to 25 HP
	Short Circuit Withstand Rating	–	18,000 A RMS Symmetrical	30,000 A RMS Symmetrical
Control Section	Digital Operator	Display	LED 4x 7 seg. (LCD option)	LED 5x 7 seg.
	Digital Operator	Number of Keys	6	8
	Copy Function	–	Built-in	Built-in USB copy unit option
	Microprocessor	–	Single	Dual
	Control Method	Pseudo-Closed Loop	No	Yes, w/ RP input
	Digital Input	Scan Rate	8 msec.	4 msec.
	Analog Input	Qty.	1 (Programmable)	2 (Programmable)
	Analog Input	Scan Rate	8 msec.	2 msec.
	Analog Input	Freq. Ref Voltage	15 Vdc	10.5 Vdc
	Analog Output	Scan Rate	8 msec.	2 msec.
	Pulse Input	Qty.	1 (Programmable)	1 (Programmable)
	Pulse Input	Input Frequency	33 kHz	32 kHz
	Pulse output	Qty.	1 (Programmable)	1 (Programmable)
	Pulse output	Output Frequency	1.44 kHz	32 kHz
	Digital Operator	Display	8 LED Indicators	6 LED Indicators
	Removable Terminal Block	–	No	Yes (w / memory)
	Thermistor Input PTC	–	No	Yes

Category	Feature	Item	P3 Series 2	G+ Mini
Control Characteristics	Overload Capacity	–	150% for 1 min.	HD: 150% for 1 min.
	Starting Torque	–	150% @ 3 Hz (V/f)	150% @ 3 Hz (V/f), 200% @ 0.5 Hz (OLV)
	Output Frequency Resolution	–	0.01 Hz	0.01 Hz
	Auto-Tuning	Automatic/OnLine	No	Yes, R1 and Rotational
	Elapse Time	–	No	Yes (Power up or Run)
	Fault Storage	–	Last 4	Last 10 w / Elapsed Time Meter
	Fault Record	–	No Trace Data Points	15 Trace Data Points
	High Current Alarm	HCA	No	Yes, 150%
	OV Suppression	–	Option- CASE	Standard
	Torque Detection	–	Over-Torque	Over and Under-Torque
	Overtemperature	Memory Retention	No	Yes
	Overtemperature	–	OH	Auto-Speed Reduction on OH
	Cooling Fan	–	Bottom-mount	Top-mount
	Drive Enable Run Permissive	–	None	Meets EN954-1, Cat. 3
	RS485 Comms	Comm. Speed	19.2kbps	115.2kbps
Key Features	Parameter Upload/ Download	–	IMPULSE Link 4.1 Basic	IMPULSE Link 4.1 Basic IMPULSE Link 4.1 WDS
	Maintenance Monitors	–	None	Capacitors, Fans, IGBTs
	Hybrid Heatsink	–	No	Yes
Enclosures	Types	Open Chassis - IP20	230 V and 460 V to 10 Hp	230 V and 460 V to 25 Hp
	Types	NEMA 1 - IP20	230 V and 460 V to 10 Hp	230 V and 460 V to 25 Hp
	Side-by-Side Mounting	–	No	Yes
Harmonics	Harmonic Filters	–	C1 as Option	C1, C2, C3 as Options
EMC	Internal RFI/EMC Filter	–	C1 as Option	C1, C2, C3 as Options
Standards	Third Party Certifications	–	UL / cUL / CE	UL / cUL / CE. RoHS, TüV
Environment	Ambient Temperature	–	-10 to 40° C	-10 to +50° C (IP20)

P3 Series 2 to G+ Mini Product Transition Guide

Data Subject to change without notice.

MAGNETEK
MATERIAL HANDLING

Magnetek, Inc.
N49 W13650 Campbell Drive
Menomonee Falls, WI 53051

Distributed by Ergonomic Partners
Sales@ErgonomicPartners.com
www.ErgonomicPartners.com
Tel: (314) 884-8884

Document Number: PL.V1000.01 September 2008 Magnetek, Inc. ©