TM—Single Girder Top Running Motorized End Trucks

For heavy-duty class "C" single girder crane applications, nothing tops Harrington top running motorized end trucks. Along with a full range of features, end truck kits include: two trucks; two sealed, totally enclosed, non-ventilated (TENV) motors with adjustable D.C. brakes; two helical gear reducers; rubber bumpers; and bridge beam fastener set. All trucks are fully painted. Bridge fabrication prints are also included. As a member of Crane Manufacturers Association of America (CMAA), Harrington builds TM trucks to meet current industry and regulatory codes.

Benefits to count on:

- Frame fabrication from ASTM A500 structural tube for superior strength, rigidity and compactness.
- Reduced wheel friction due to heavy-duty side guide rollers results in smooth crane travel—guide rollers are 3 1/2" O.D. (5" on 10 T) with fixed steel axles.
- Minimize assembly labor with fully machined frames—girder connection, bracing and collector mounting bracket holes are drilled and tapped for easy installation.
- Purchase the right component for the job—dedicated models for capacities of 1, 3, 5 and 10 Ton, with maximum span increments of 35' or 60'.
- Suitable for use on ASCE crane rail or square bar—wheels are machined steel with flat tread and each has 2 deep groove ball bearings, meeting L10 bearing life criteria for class C cranes.
- Sealed TENV drives with quiet, smooth–operating helical gear reducers.
- Gear reducer is designed for easy field conversion between L and S speeds.
- Drives are designed for crane service, with 30 minute rating and feature cooling fins for efficient heat dissipation.
- Externally adjustable D.C. brakes allow controlled deceleration—adjustable up to 50% of rated motor torque.
- Thermal motor protection is standard.
- Drives and brakes are compatible with Electronic Acceleration Control (EAC) and Variable Frequency Drive (VFD).
- Drives are connectable for 230/460V-3-60 (including dual speed models). Other voltages available.
- Rail sweeps and drop stops are standard.
- Longer or shorter end truck lengths are available—consult factory.

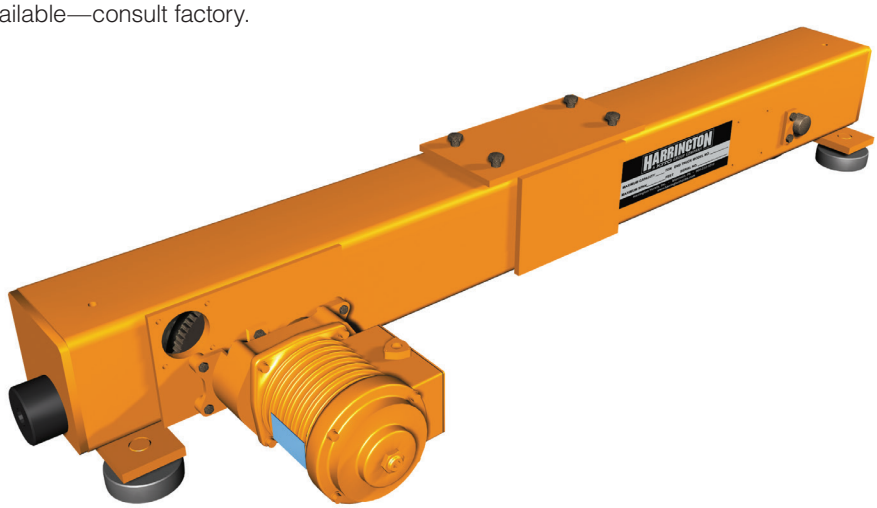

TM — TOP RUNNING MOTORIZED END TRUCK — DIMENSIONS

Cap. (Tons)	Max. Span (ft)	End Truck Product Code	Wheel Dia. (in)	Sug. Min. Runway Rail (ASCE#)	A Overall Length (in)	B Roller Base (in)	D Wheel Base (in)	N Runway Ctr. Line to Outer Edge of ET Tube (in)	X* Width Beyond Span (in)	Y Top of Rail to Top of End Truck (in)	G Motor (in)
1	35	TML/S/H/D-3-0135	3.74	30	61	53	43	2.1	4.6	7.1	12.7 (L/S) 13.1 (H) 14.0 (D)
	60	TML/S/H/D-3-0160			98	90	80				
3	35	TML/S/H/D-3-0335	6.10		62	54	43	3.8			13.0 (L/S) 13.4 (H) 14.3 (D)
	60	TML/S/H/D-3-0360			99	91	80				
5	35	TML/S/H/D-3-0535		40	62	54	43		4.7	9.2	
	60	TML/S/H/D-3-0560	8.27		99	90	74	3.5		9.3	15.0 (L/S/D) 15.4 (H)
10	35	TML/S/H/D-3-1035	9.84	60	63	53	37	5.3	6.3	11.3	17.4 (L/S/D) 18.7 (H)
	60	TML/S/H/D-3-1060			100	90	74				

*Based on suggested minimum runway rail.

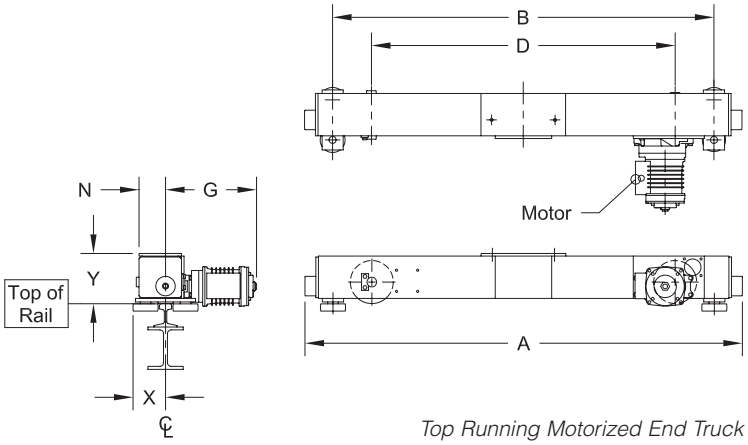

Top Running Motorized End Truck

TM — TOP RUNNING MOTORIZED END TRUCK — SPECIFICATIONS

End Truck Product Code	Speed Codes L and S: One Motor Per End Truck 3 Phase 60 Hz			Speed Code H: One Motor Per End Truck 3 Phase 60 Hz			Speed Code D: One Motor Per End Truck 3 Phase 60 Hz			End Truck Weight (lbs/pr)
	Output (Hp)	Rated Current (amps ea.) @230V	Rated Current (amps ea.) @460V	Output (Hp)	Rated Current (amps ea.) @230V	Rated Current (amps ea.) @460V	Output (Hp)	Rated Current (amps ea.) @230V	Rated Current (amps ea.) @460V	
TML/S/H/D-3-0135	0.33	1.6	1.0	0.5	2.1	1.3	0.33/0.08	1.6/1.1	0.9/0.8	325
TML/S/H/D-3-0160										422
TML/S/H/D-3-0335										421
TML/S/H/D-3-0360										538
TML/S/H/D-3-0535										512
TML/S/H/D-3-0560	0.5	2.1	1.3	1.0	3.3	2.0	0.5/0.13	2.0/1.5	1.2/0.9	739
TML/S/H/D-3-1035	1.0	3.3	2.0	2.0	5.8	3.1	0.1/0.25	3.7/2.1	2.3/1.4	883
TML/S/H/D-3-1060										1063

Speed Code
L - Designates 40 ft/min
S - Designates 80 ft/min
H - Designates 120 ft/min
D - Designates dual speed 80/20 ft/min

***Product Code Derivation** - example: TML-3-0135*
T - Top Running
M - Motorized
L - Speed of 40 ft/min
3 - Series Number
01 - Max. Capacity – 1 Ton
35 - Maximum Span – 35 feet

TG—Single Girder Top Running Geared End Trucks

TG end trucks provide similar benefits to the TM truck, but with geared drive. Along with many important features, end truck kits include: two trucks; hand wheel drive; shaft couplers; appropriate drive shaft bearing supports based on span; rubber bumpers; and bridge beam fastener set. All trucks are fully painted. Bridge fabrication prints are also included. As a member of Crane Manufacturers Association of America (CMAA), Harrington builds TG trucks to meet current industry and regulatory codes.

Benefits to count on:

- Versatile design allows hand chain wheel placement anywhere on drive shaft based on application needs.
- Upgrade easily to TM top running motorized design by simply adding drives and reducers.
- Ideal for precision spotting requirements where motorized operation is not necessary.
- Longer or shorter end truck lengths are available—consult factory.

TP—Single Girder Top Running Push End Trucks

TP end trucks provide similar benefits to the top running motorized TM truck, but with push operation. Along with many important features, end truck kits include: two trucks; rubber bumpers; and bridge beam fastener set. All trucks are fully painted. Bridge fabrication prints are also included. As a member of CMAA, Harrington builds TP trucks to meet current industry and regulatory codes.

Benefits to count on:

- Compared to flanged wheel trucks, TP trucks with guide rollers operate easily, particularly in long span or long lift applications.
- Upgrade easily to top running geared TG or motorized TM model—frames are fully machined and prepared for conversion.
- Longer or shorter end truck lengths are available—consult factory.

TG — TOP RUNNING GEARED END TRUCK — SPECIFICATIONS AND DIMENSIONS

Cap. (Tons)	Max. Span (ft)	End Truck Product Code	Wheel Dia. (in)	Sug. Min. Runway Rail (ASCE#)	A Overall Length (in)	B Roller Base (in)	D Wheel Base (in)	J Hand Wheel Offset (in)	N Runway Ctr. Line to Outer Edge of ET Tube (in)	X* Width Beyond Span (in)	Y Top of Rail to Top of End Truck (in)	End Truck Weight (lbs/pr)
1	35	TG-3-0135	3.74	30	61	53	43	9.7	2.1	4.6	7.1	264
	50	TG-3-0150			98	90	80					360
3	35	TG-3-0335	6.10		62	54	43	10.0	3.8			359
	50	TG-3-0350			99	91	80					477
5	35	TG-3-0535		40	62	54	43			4.7	9.2	450
	50	TG-3-0550	8.27		99	90	74	10.3	3.5		9.3	703

*Based on suggested minimum runway rail.
**Standard hand chain drop is 8 ft. from top of runway rail.

TP — TOP RUNNING PUSH END TRUCK — SPECIFICATIONS AND DIMENSIONS

Cap. (Tons)	Max Span (ft)	End Truck Product Code	Wheel Dia. (in)	Sug. Min. Runway Rail (ASCE#)	A Overall Length (in)	B Roller Base (in)	D Wheel Base (in)	N Runway Ctr. Line to Outer Edge of ET Tube (in)	X* Width Beyond Span (in)	Y Top of Rail to Top of End Truck (in)	End Truck Weight (lbs/pr)
1	35	TP-3-0135	3.74	30	61	53	43	2.1	4.6	7.1	242
	45	TP-3-0145			98	90	80				338
2	45	TP-3-0245	6.10		99	91		3.8			454
3	35	TP-3-0335			62	54	43				337
5	35	TP-3-0535		40					4.7	9.2	420

*Based on suggested minimum runway rail.

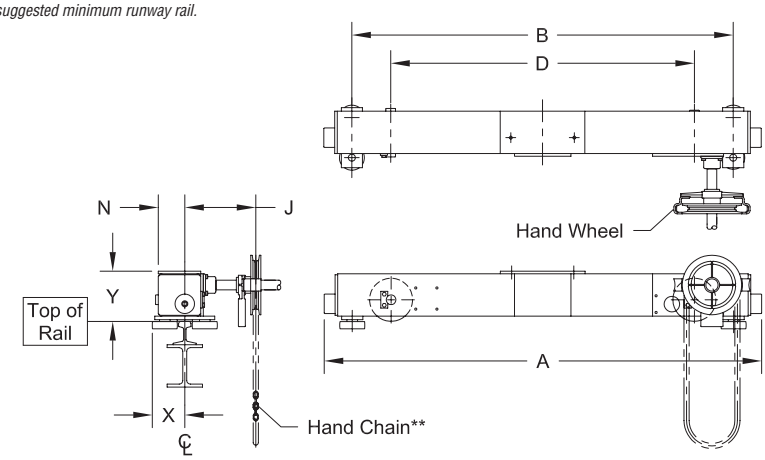

Top Running Geared End Truck

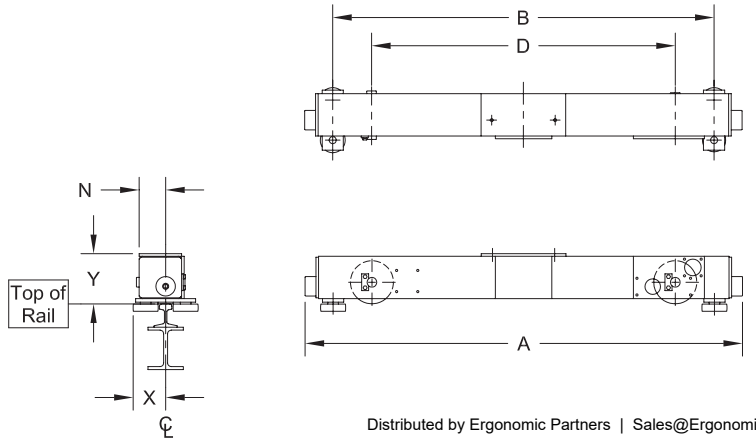

Top Running Manual Push End Truck

UM—Single Girder Underhung Motorized End Trucks

For heavy-duty class "C" single girder crane applications, Harrington underhung motorized end trucks combine superior performance with underhung space savings. Along with a full range of features, end truck kits include: two trucks; two sealed, totally enclosed, non-ventilated (TENV) motors with adjustable D.C. brakes; two helical gear reducers; rubber bumpers; and bridge beam fastener set. All trucks are fully painted. Bridge fabrication prints are also included. As a member of the Crane Manufacturers Association of America (CMAA), Harrington builds UM trucks to meet current industry and regulatory codes.

Benefits to count on:

- Frames fabricated from MC channel provide superior strength, rigidity and structural integrity.
- Reduced wheel friction due to heavy-duty side guide rollers results in smooth crane travel—guide rollers are 3 1/2" O.D. with fixed steel axles.
- Dual tread wheels for use on S or W shaped runway beams—each wheel fitted with 2 deep groove ball bearings, meeting L10 bearing life criteria for class C cranes.
- Runway flange widths up to 6" standard, with wider ranges also available (trucks for patented track available).
- Minimize assembly labor with fully machined frames—girder connection, bracing and collector mounting bracket holes are pre-drilled for easy installation.
- Purchase the right component for the job—dedicated models for capacities of 2, 3, and 5 Ton, with maximum span increments of 35' or 50'.
- Sealed TENV drives with quiet, smooth–operating helical gear reducers.
- Gear reducer is designed for easy field conversion between L and S speeds.
- Drives are designed for crane service, with 30 minute rating and feature cooling fins for efficient heat dissipation.
- Thermal motor protection is standard.
- Externally adjustable D.C. brakes allow controlled deceleration—adjustable up to 50% of rated motor torque.
- Drives and brakes are compatible with Electronic Acceleration Control (EAC) and Variable Frequency Drive (VFD).
- Drives are connectable for 230/460V-3-60 (including dual speed models). Other voltages available.
- Rail sweeps and drop stops are standard.
- Longer or shorter end truck lengths are available—consult factory.

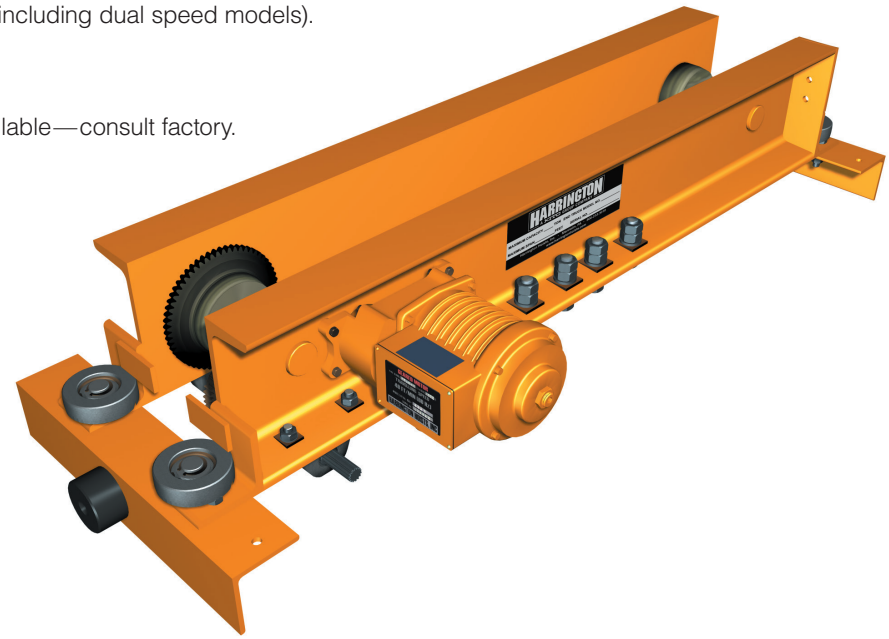

UM — UNDERHUNG MOTORIZED END TRUCK — DIMENSIONS

Cap. (Tons)	Max. Span (ft)	End Truck Product Code	Wheel Dia. (in)	T Flange Range Std. (in)	A Overall Length (in)	B Roller Base (in)	D Wheel Base (in)	M End Truck Frame Width (in)	N Runway Ctr. Line to Outer Edge of ET (in)	R Wheel Running Surf. To Bottom of Truck (in)	X* Width Beyond Span (in)	Y Wheel Running Surface to Upper Most Part of ET (in)	G Motor (in)
2	35	UML/S/H/D-3-0235	4.33	3 - 6	60	53	39	T+8.1	M/2	1.5	11.3 -T/2	6.5	T/2+ 11.9 (L/S) 12.3 (H) 13.3 (D)
	50	UML/S/H/D-3-0250			82	75	61						
3	35	UML/S/H/D-3-0335	4.92		60	53	35	T+8.2					
	50	UML/S/H/D-3-0350			82	75	57						
5	35	UML/S/H/D-3-0535	5.51	4 – 6	60	53	33	T+9.8		1.6		6.8	T/2+ 13.7 (L/S/D) 14.2 (H)
	50	UML/S/H/D-3-0550			82	75	55						

These formulas for Width Beyond Span do not apply for flanges greater than 6 inches. For flanges greater than 6 inches, consult factory.

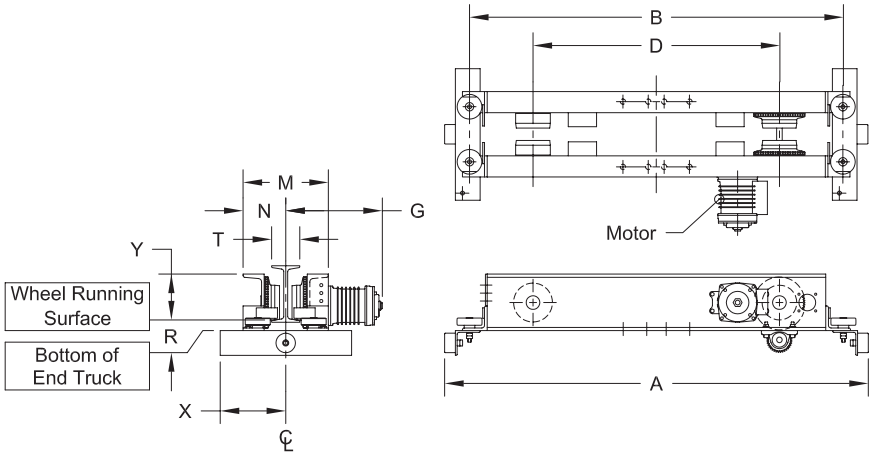

Underhung Motorized End Truck

UM – UNDERHUNG MOTORIZED END TRUCK — SPECIFICATIONS

End Truck Product Code	Speed Codes L and S: One Motor Per End Truck 3 Phase 60 Hz			Speed Code H: One Motor Per End Truck 3 Phase 60 Hz			Speed Code D: One Motor Per End Truck 3 Phase 60 Hz			End Truck Weight (lbs/pr)
	Output (Hp)	Rated Current (amps ea.) @230V	Rated Current (amps ea.) @460V	Output (Hp)	Rated Current (amps ea.) @230V	Rated Current (amps ea.) @460V	Output (Hp)	Rated Current (amps ea.) @230V	Rated Current (amps ea.) @460V	
UML/S/H/D-3-0235	0.33	1.6	1.0	0.5	2.1	1.3	0.33/0.08	1.6/1.1	0.9/0.8	522
UML/S/H/D-3-0250										659
UML/S/H/S-3-0335										543
UML/S/H/D-3-0350										680
UML/S/H/D-3-0535	0.5	2.1	1.3	1.0	3.3	2.0	0.5/0.13	2.0/1.5	1.2/0.9	638
UML/S/H/D-3-0550										795

Speed Code
L - Designates 40 ft/min
S - Designates 80 ft/min
H - Designates 120 ft/min
D - Designates dual speed 80/20 ft/min

***Product Code Derivation** - example: UML-3-0235*
U - Underhung
M - Motorized
L - Speed of 40 ft/min
3 - Series number
02 - Max. Capacity - 2 Ton
35 - Maximum Span - 35 feet

UG—Single Girder Underhung Geared End Trucks

UG end trucks provide similar benefits to the UM truck, but with geared drive. Along with many important features, end truck kits include: two trucks; hand wheel drive; shaft couplers; appropriate drive shaft bearing supports based on span; rubber bumpers; and bridge beam fastener set. All trucks are fully painted. Bridge fabrication prints are also included. As a member of Crane Manufacturers Association of America (CMAA), Harrington builds UG trucks to meet current industry and regulatory codes.

Benefits to count on:

- Versatile design allows hand chain wheel placement anywhere on drive shaft based on application needs.
- Upgrade easily to UM series by simply adding drives and reducers.
- Ideal for precision spotting requirements where motorized operation is not necessary.
- Longer or shorter end truck lengths are available—consult factory.
- Suitable for use on S or W shaped runway beams.

UP—Single Girder Underhung Push End Trucks

UP end trucks provide similar benefits to the UM underhung motorized truck, but for push operation. Along with many important features, end truck kits include: two trucks; rubber bumpers; and bridge beam fastener set. All trucks are fully painted. Bridge fabrication prints are also included. As a member of CMAA, Harrington builds UP trucks to meet current industry and regulatory codes.

Benefits to count on:

- Compared to flanged wheel trucks, UP trucks with guide rollers operate easily, particularly in long span or long lift applications.
- Upgrade easily to underhung geared UG or motorized UM models—frames are fully machined and prepared for conversion.
- Longer or shorter end truck lengths are available—consult factory.
- Suitable for use on S or W shaped runway beams.

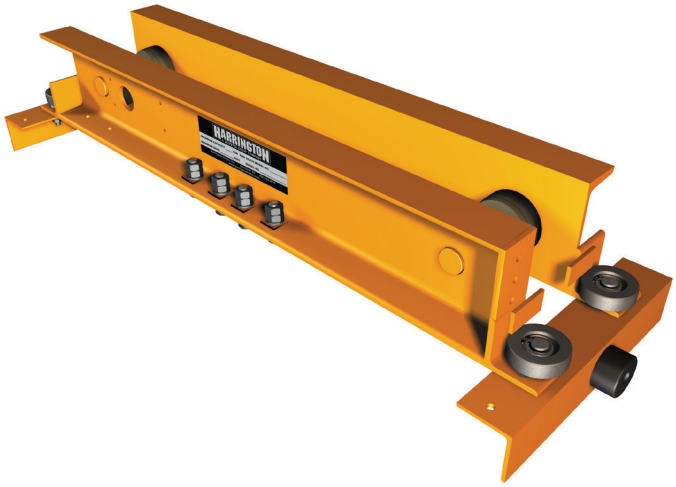

UG — UNDERHUNG GEARED END TRUCK — SPECIFICATIONS AND DIMENSIONS

Cap. (Tons)	Max Span (ft)	End Truck Product Code	Wheel Dia. (in)	T Flange Range Std. (in)	A Overall Length (in)	B Roller Base (in)	D Wheel Base (in)	J Hand Wheel Offset (in)	M End Truck Frame Width (in)	N Runway Ctr. Line to Outer Edge of ET (in)	R Wheel Running Surf to Bottom of Truck (in)	X* Width Beyond Span (in)	Y Wheel Running Surface to Upper Most Part of ET (in)	End Truck Weight (lbs/pr)
2	35	UG-3-0235	4.33	3 – 6	60	53	39	T/2+9.0	T+8.1	M/2	1.5	11.3-T/2	6.5	503
	45	UG-3-0245			82	75	61							640
3	35	UG-3-0335	4.92		60	53	35	T/2+8.9	T+8.2				6.7	529
	45	UG-3-0345			82	75	57							666
5	35	UG-3-0535	5.51	4 – 6	60	53	33	T/2+9.0	T+9.8		1.6		6.8	611
	45	UG-3-0545			82	75	55							768

*These formulas for Width Beyond Span do not apply for flanges greater than 6 inches. For flanges greater than 6 inches, consult factory.
**Standard hand chain drop is 8 ft. from bottom of runway beam.

UP — UNDERHUNG PUSH END TRUCK — SPECIFICATIONS AND DIMENSIONS

Cap. (Tons)	Max. Span (ft)	End Truck Product Code	Wheel Dia. (in)	T Flange Range Std. (in)	A Overall Length (in)	B Roller Base (in)	D Wheel Base (in)	M End Truck Frame Width (in)	N Runway Ctr. Line to Outer Edge of ET (in)	R Wheel Running Surf. to Bottom of Truck (in)	X* Width Beyond Span (in)	Y Wheel Running Surface to Upper Most Part of ET (in)	End Truck Weight (lbs/pr)
2	35	UP-3-0235	4.33	3 – 6	60	53	39	T+8.1	M/2	1.5	11.3 – T/2	6.5	448
	45	UP-3-0245			82	75	61						585
3	35	UP-3-0335	4.92		60	53	35	T+8.2					472
5	35	UP-3-0535	5.51	4 – 6	60	53	33	T+9.8		1.6		6.4	546

* These formulas for Width Beyond Span do not apply for flanges greater than 6 inches. For flanges greater than 6 inches, consult factory

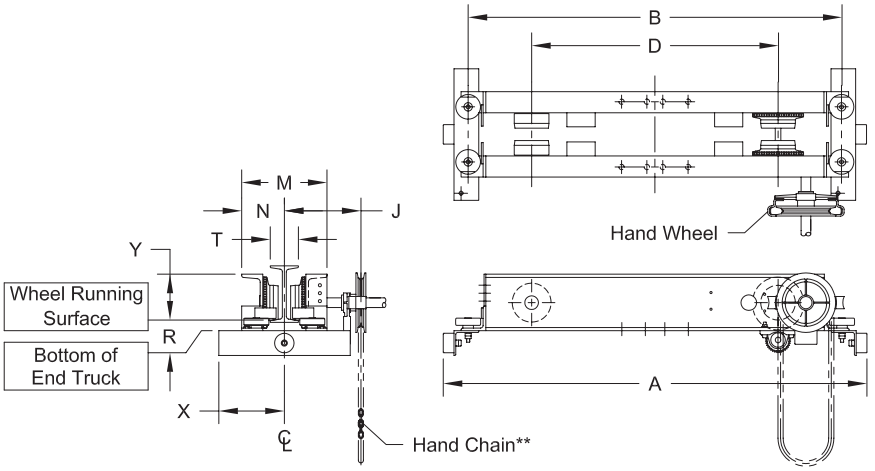

Underhung Geared End Truck

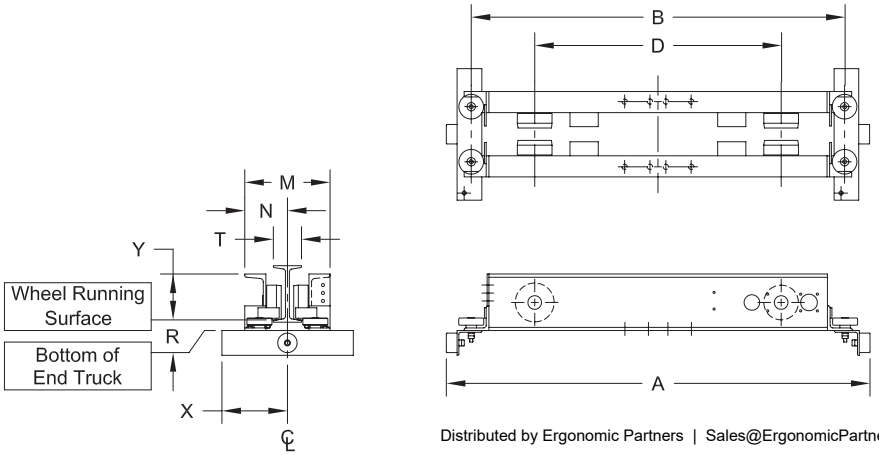

Underhung Push End Truck