MAGNETEK
MATERIAL HANDLING

Product Transition Guide IMPULSE®•G+ & VG+ Series 2 to Series 4

IMPULSE®•G+ & VG+ Series 4 Transition Guide

Page Intentionally Left Blank

1.1 Overview 4
1.2 Drive Replacement Checklist 4
1.3 Ratings Summary 6
1.4 Digital Operator Comparison 9
1.5 Terminals 10
Main Circuit Terminals 10
Control Circuit Terminals 11
1.6 Terminal Size and Wire Gauge Comparison 13
1.7 Dimensions, Installation Space and Substitution Material 31
Drive Dimension Comparison 31
IMPULSE® G+/VG+ Series 4 Drive Options 34
1.8 Dimensions, Installation Space and Substitution Material 38

1.1 Overview

This purpose of this document is to provide an easy transition from the G+/VG+ Series 2 to the G+/VG+ Series 4. For the advanced portion, please refer to the G+/VG+ Series 4 Instruction Manual (P/N 144-23910).

1.2 Drive Replacement Checklist

	Item	Checkpoints	Checked?
Hardware	**Basic**	• Can the existing mounting holes be used? Check if the new drive dimensions are different than the current drive. – Verify that the existing dimensions reference in Section 1.7, "Dimensions, installation space and substitution material" of this manual compares the sizes of the current and new unit. If a mechanical substitution kit is necessary, it is referenced in Section 1.7.	
		< <u>Digital operator</u> > • Was a remote operator connected to the current unit? – If so, do not attempt to connect the G+ Series 2 remote operator to the G+ Series 4, as they are incompatible.	
	Main and Control Terminals	**< <u>Wire Length</u> >** • In the replacement drive, the main and control circuit terminals may be mounted in different positions. Check to ensure all cables are long enough to be connected to the new unit.	
		< <u>Main circuit wires and terminal specifications</u> > • Compare the occupied terminals of the current unit with the new drive's terminals (shape, size, etc.), and verify that the wires fit in the new unit's terminals, using Section 1.5 "Terminals", specifically "Control Terminal Sizes and Wire Sizes" of this document.	
Software	**Parameter**	**< <u>Check the parameter settings</u> >** • Read the parameter settings of the current unit and perform a parameter conversion to the new parameters. – Use IMPULSE® Link for conversion. – Consult Magnetek Service for conversion assistance. – If there is special software installed or parameters appear that are not mentioned in this document, contact your Magnetek representative.	

	Item	Checkpoints	Checked?
Options, Others	Option Cards	**< Is an option card installed? >** • Check if any option card is installed. – If an option card is installed, get the equivalent option card for the G+ Series 4. – Never attempt to apply G+ Series 2 option cards to the G+ Series 4 unit. – The option card on the G+ Series 4 may have a different connector on the G+ Series 2. Make sure that the connectors fit into the new option card before using it.	
	Others	**< Is a braking resistor installed? >** • Check if a braking resistor is installed on the current drive. – Inspect the braking resistor for physical damage or wear before connecting it to the new drive. – Inspect DB wiring for cracking or possible shorts. – Connect the braking resistor to the equivalent terminals on the new unit. – The terminals might have a different location in the new drive; check to ensure that existing wiring is long enough to reach the new terminal location. – Verify terminal differences.	
		< Is a braking unit installed? > • Check if a braking unit is used in the current installation. – Inspect the braking unit for physical damage or wear before connecting it to the new drive. – Connect the braking unit to the equivalent terminals on the new unit. – The terminals might have a different location in the new drive; check to ensure that existing wiring is long enough to reach the new terminal location.	
		< Is an AC reactor or DC choke installed? > • Check if an AC reactor or DC choke is used in the current installation. – Inspect the reactor or choke and wiring for physical damage or wear before connecting it to the new drive. – Make sure that the reactor or choke data are appropriate for the replacement drive. – The terminals might have a different location in the new drive; check to ensure that existing wiring is long enough to reach the new terminal location.	

• Refer to the instruction manual for questions about installation, parameter settings or detailed parameter/function descriptions.

1.3 Ratings Summary

The following table summarizes the output current ratings for the G+ Series 4 and G+ Series 2 with respect to the specific drive model.

Rated Input Voltage	G+ Series 2 Drive Model Number (-AFG+/FVG+)	Heavy Duty		G+ Series 4 Drive Model Number (-G+/VG+S4)	Heavy Duty	
		Rated Output Current (Amps)	Nominal HP		Rated Output Current (Amps)	Nominal HP
230V, 3-Φ	**N/A**	N/A	N/A	**2003**	3.2	0.5
	N/A	N/A	N/A	**2005**	5.0	0.75
	2006	6	1	**2007**	6.9	1
	N/A	N/A	N/A	**2008**	8	2
	2008	8	2	**2011**	11	2
	2011	11	3	**2014**	14	3
	2017	17.5	5	**2017**	17.5	3
	2025	25	7.5	**2025**	25	5
	2033	33	10	**2033**	33	7.5
	2054	54	15	**2047**	47	10
	2068	68	20	**2060**	60	15
	N/A	N/A	N/A	**2075**	75	20
	2080	80	30	**2085**	85	30
	N/A	N/A	N/A	**2115**	115	40
	2130	130	50	**2145**	145	50
	2160	160	60	**2180**	180	60
	2224	224	75	**2215**	215	75
	2300	300	100	**2283**	283	100
	N/A	N/A	N/A	**2346**	346	125
	N/A	N/A	N/A	**2415**	415	150

Rated Input Voltage	G+ Series 2 Drive Model Number (-AFG+/FVG+)	Heavy Duty		G+ Series 4 Drive Model Number (-G+/VG+S4)	Heavy Duty	
		Rated Output Current (Amps)	Nominal HP		Rated Output Current (Amps)	Nominal HP
460V, 3-Φ	**N/A**	N/A	N/A	**4001**	1.8	0.5
	4001	1.8	1	**4003**	3.4	1
	4003	3.4	2	**4004**	4.8	2
	4005	4.8	3	**4005**	5.5	3
	N/A	N/A	N/A	**4007**	7.2	5
	4008	8	5	**4009**	9.2	5
	4011	11	7.5	**4014**	14.8	7.5
	4014	14	10	**4018**	18	10
	4021	21	15	**4024**	24	15
	4027	27	20	**4031**	31	20
	4034	34	25	**4039**	39	25
	4041	41	30	**4045**	45	30
	4052	52	40	**4060**	60	40
	4065	65	50	**4075**	75	50
	4080	80	60	**4091**	91	60
	4096	96	75	**4112**	112	75
	4128	128	100	**4150**	150	100
	4165	165	125	**4180**	180	125
	N/A	N/A	N/A	**4216**	216	150
	4224	224	150	**4260**	260	200
	4302	302	250	**4304**	304	250
	N/A	N/A	N/A	**4370**	370	300
	4450	450	350	**4450**	450	350
	4605	605	500	**4605**	605	500

Rated Input Voltage	G+ Series 2 Drive Model Number (-AFG+/FVG+)	Heavy Duty		G+ Series 4 Drive Model Number (-G+/VG+S4)	Heavy Duty	
		Rated Output Current (Amps)	Nominal HP		Rated Output Current (Amps)	Nominal HP
600V, 3-Φ	**N/A**	N/A	N/A	**5001-G+S4**	1.7	1
	5003	3.5	2	**5003-G+S4**	3.5	2
	5004	4.1	3	**5004-G+S4**	4.1	3
	5006	6.3	5	**5006-G+S4**	6.3	5
	5009	9.8	7.5	**5009-G+S4**	9.8	7.5
	5012	12.5	10	**5012-G+S4**	12.5	10
	5017	17	15	**5017-G+S4**	17	15
	5022	22	20	**5022-G+S4**	22	20
	5027	27	25	**5027-G+S4**	27	25
	5032	32	30	**5032-G+S4**	32	30
	5041	41	40	**5041-G+S4**	41	40
	5052	52	50	**5052-G+S4**	52	50
	5062	62	60	**5062-G+S4**	62	60
	5077	77	75	**5077-G+S4**	77	75
	5099	99	100	**5099-G+S4**	99	100
	5130	130	125	**5130-G+S4**	130	125
	5172	172	150	**5172-G+S4**	172	150
	5200	200	200	**5200-G+S4**	200	200

1.4 Digital Operator Comparison

- Enhanced LCD operator with built-in copy function and parameter verify for the IMPULSE®•G+ & VG+ Series 4
- Soft keys simplify operation and programming
- LCD Contrast Adjustment
- Common parameter groupings for easy transition and set-up
- The IMPULSE®•G+ & VG+ Series 4 have a new layout for faster parameter selection

IMPULSE®•G+ & VG+ Series 2 LCD Operator	IMPULSE®•G+ & VG+ Series 4 LCD Operator
LCD Backlit Display 2 Line x 16 Characters	LCD Backlit Display 5 Line x 16 Characters New Button Layout Soft Keys (F1/F2) Smaller

- A Quick Start menu is added to aid in simple start up
- The Quick Start menu consists of 26 parameters. The advanced menu offers full parameter access.

Menu Structure Comparison

IMPULSE®•G+ & VG+ Series 2	IMPULSE®•G+ & VG+ Series 4
Operation	Operation
--	Auto-Tuning
Programming (Quick Start, Basic, Advanced)	Programming
Modified Constants	Quick Settings
Auto-Tuning	Modified Constants
Initialize	Monitor Menu

1.5 Terminals

Main Circuit Terminals

- As G+ Series 2 and G+ Series 4 drive models may have different terminal sizes (depending on capacity), the terminal must be carefully checked before replacement.
- The main terminal functionality has not been changed between the G+ Series 2 and the G+ Series 4.

Main Terminals		Note
G+ Series 2	G+ Series 4	
R/L1	R/L1	Main circuit power supply input, connects line power to the drive
S/L2	S/L2	
T/L3	T/L3	
U/T1	U/T1	Drive Output, connects to the motor
V/T2	V/T2	
W/T3	W/T3	
B1	B1	Braking resistor
B2	B2	
+2	+2	DC reactor connection (+1, +2) (remove shorting bar) DC power supply input (+1, -) Braking unit connection (+3, -)
+1	+1	
—	+3	
⏚	—	Ground Terminal (10Ω or less)

Control Circuit Terminals

- "—" indicates that an equivalent terminal on the other drive model does not exist.
- G+ Series 4 Defaults are listed in parentheses.
- Terms
  - ❑ MFDI: Multi-Function Digital Input
  - ❑ MFDO: Multi-Function Digital Output
  - ❑ MFAI: Multi-Function Analog Input
  - ❑ MFAO: Multi-Function Analog Output

Control Terminals		Function	Signal Level	
G+ Series 2	G+ Series 4		G+ Series 2	G+ Series 4
1	S1	MFDI 1 (Run Forward)	Photo-coupler isolation 24 VDC, 8mA 120 VAC (with G5IF)	Photo-coupler isolation 120 VAC (S4IF)
2	S2	MFDI 2 (Run Reverse)		
3	S3	MFDI 3 (Speed 2)		
4	S4	MFDI 4 (Speed 3)		
5	S5	MFDI 5 (Speed 4)		
6	S6	MFDI 6 (Speed 5)		
7	S7	MFDI 7 (External Fault)		
8	S8	MFDI 8 (Microspeed Gain 1)		
11	X2	MFDI Common		
X2 (SERIES 2IF)				
9, 10	M1, M2	MFDO (Brake Release)	Form A Relay: 250 VAC, 1A 30 VDC, 1A	Form A Relay: 250 VAC, 1A 30 VDC, 1A
25	M3, M4	MFDO (X-Press Programming)	Open Collector: 48 VDC, 50mA	Form A Relay: 250 VAC, 1A 30 VDC, 1A
1 (G5OUT)			Thyristor: 240 VAC, 1.5A	
26	M5, M6	MFDO (X-Press Programming)	Open Collector: 48 VDC, 50mA	Form A Relay: 250 VAC, 1A 30 VDC, 1A
2 (G5OUT)			Thyristor: 240 VAC, 1.5A	
27	—	Open Collector Output Common	—	—
C (G5OUT)		Common		
18, 19 20	MA, MB, MC	Fault annunciate Terminals MA-MC: N/O Terminals MB-MC: N/C	Form C Relay: 250 VAC, 1A 30 VDC, 1A	Form C Relay: 250 VAC, 1A 30 VDC, 1A
15	+V	Power supply for analog inputs	+15 VDC, 20mA	+10.5 VDC, 20mA
33	-V	Power supply for analog inputs	-15 VDC, 20mA	-10.5 VDC, 20mA
13	A1	MFAI 1 (Master Frequency Reference)	-10 to +10V (20kΩ) 0 to +10V (20kΩ)	-10 to +10V (20kΩ) 0 to +10V (20kΩ)
14	A2	MFAI 2 (Not Used)	-10 to +10V (20kΩ) 0 to +10V (20kΩ) 4 to 20mA (250Ω)	-10 to +10V (20kΩ) 0 to +10V (20kΩ) 4 to 20mA (250Ω)
16	A3	MFAI 3 (Master Frequency Reference)	-10 to +10V (20kΩ) 0 to +10V (20kΩ)	-10 to +10V (20kΩ) 0 to +10V (20kΩ)
17	AC	Analog Common		

Control Terminals		Function	Signal Level	
G+ Series 2	G+ Series 4		G+ Series 2	G+ Series 4
12	E (G)	Ground for shielded lines and option cards		
—	RP	Multi-Function Pulse Train Input		Input Freq.: 0 to 32 kHz Duty Cycle: 30 to 70% High level: 3.5 to 13.2 VDC Low Level: 0 to 0.8 VDC Input Impedance: 3kΩ
—	MP	Pulse train output (Output frequency)		32 kHz (max)
21	FM	MFAO 1 (Output frequency)	-10 to +10V, 2mA 0 to +10V, 2mA	-10 to +10V, 2mA 0 to +10V, 2mA
22	AC	Analog Common		
23	AM	MFAO 2 (Output current)	-10 to +10V, 2mA 0 to +10V, 2mA	-10 to +10V, 2mA 0 to +10V, 2mA
—	H1	Safe Disable input 1		24 VDC, 8mA Internal Impedance: 3.3kΩ
—	H2	Safe Disable input 2		
—	HC	Safe Disable common		
—	DM+	Safety monitor output		48 VDC, 8mA
—	DM-	Safety monitor output common		
—	R+	Receive (+)		RS-485/422 Line Driver 115.2 kbps (max)
—	R-	Receive (-)		
—	S+	Transmit (+)		
—	S-	Transmit (-)		
—	IG	Shield connection		

1.6 Terminal Size and Wire Gauge Comparison

IMPULSE®•G+ & VG+		Terminal Signal	Terminal Screw	Tightening Torque N. m (lb.in.)	Possible Gauges mm^2 (AWG/ kcmil)	Recommended Gauge mm^2 (AWG/ kcmil)
Series 2	2006	R/L1, S/L2, T/L3, U/T1, V/T2, W/T3, -, +1, +2, B1, B2, ⏚	M4	—	2 to 5.5 (14 to 10)	12
Series 4	2003 2005 2007	R/L1, S/L2, T/L3, U/T1, V/T2, W/T3, -, +1, +2, B1, B2,	M4	1.2 to 1.5 (10.6 to 13.3)	2 to 5.5 (14 to 10)	14 to 10
		⏚				14 (12 for 2007)
Series 2	2008	R/L1, S/L2, T/L3, U/T1, V/T2, W/T3, -, +1, +2, B1, B2	M4	—	2 to 5.5 (14 to 10)	12
		⏚			3.5 to 5.5 (12 to 10)	
Series 4	2008	R/L1, S/L2, T/L3, U/T1, V/T2, W/T3, -, +1, +2, B1, B2,	M4	1.2 to 1.5 (10.6 to 13.3)	2 to 5.5 (14 to 10)	14 to 10
		⏚				12
Series 2	2011	R/L1, S/L2, T/L3, U/T1, V/T2, W/T3, -, +1, +2, B1, B2, ⏚	M4	—	3 to 5.5 (12 to 10)	12
Series 4	2011	R/L1, S/L2, T/L3, U/T1, V/T2, W/T3, -, +1, +2, B1, B2 ⏚	M4	1.2 to 1.5 (10.6 to 13.3)	2 to 5.5 (14 to 10)	14 to 10
						12
Series 2	2017	R/L1,S/L2,T/L3, U/T1,V/T2,W/T3, -,+1, +2, B1, B2, ⏚	M4	—	5.5 (10)	12, 10 (ground)
Series 4	2017	R/L1,S/L2,T/L3, -,+1, +2	M4	1.2 to 1.5 (10.6 to 13.3)	3.3 to 5.5 (12 to 10)	12 to 10, 10 (ground)
		U/T1,V/T2,W/T3,				
		⏚				
		B1, B2			2 to 5.5 (14 to 10)	

IMPULSE®•G+ & VG+		Terminal Signal	Terminal Screw	Tightening Torque N. m (lb.in.)	Possible Gauges mm^2 (AWG/ kcmil)	Recommended Gauge mm^2 (AWG/ kcmil)
Series 2	2025	R/L1, S/L2, T/L3, U/T1, V/T2, W/T3, -, +1, +2, B1, B2,	M5	—	8 (8)	12, 10 (ground)
		⏚			5.5 to 8 (10 to 8)	
Series 4	2025	R/L1, S/L2, T/L3, -, +1, +2	M4	1.2 to 1.5	5.5 to 14 (10 to 6)	10 to 6
		U/T1, V/T2, W/T3	M4	1.2 to 1.5	5.5 to 14 (10 to 6)	10 to 6
		B1, B2	M4	1.2 to 1.5	2 to 5.5 (14 to 10)	—
		⏚	M5	2 to 2.5	5.5 to 8 (10 to 8)	8
Series 2	2033	R/L1, S/L2, T/L3, U/T1, V/T2, W/T3, -, +1, +2, B1, B2,	M5	—	8 (8)	10
		⏚	M5	—	5.5 to 8 (10 to 8)	10
Series 4	2033	R/L1, S/L2, T/L3, -, +1, +2	M4	1.2 to 1.5 (10.6 to 13.3)	14 (6)	8 to 6
		U/T1, V/T2, W/T3	M4	1.2 to 1.5 (10.6 to 13.3)	8 to 14 (8 to 6)	8 to 6
		B1, B2	M4	1.2 to 1.5 (10.6 to 13.3)	3.5 to 5.5 (12 to 10)	—
		⏚	M5	2 to 2.5 (17.7 to 22.1)	5.5 to 8 (10 to 8)	8
Series 2	2054	R/L1, S/L2, T/L3, U/T1, V/T2, W/T3, -, +1, +2, B1, B2,	M6	—	22 (4)	6
		⏚	M6	—	8 (8)	8
Series 4	2047	R/L1, S/L2, T/L3, -, +1, +2	M6	4 to 6 (35.4 to 53.1)	14 to 22 (6 to 4)	6 to 4
		U/T1, V/T2, W/T3	M6	4 to 6 (35.4 to 53.1)	14 to 22 (6 to 4)	6 to 4
		B1, B2	M5	2 to 2.5 (17.7 to 22.1)	5.5 to 14 (10 to 6)	—
		⏚	M6	4 to 6 (35.4 to 53.1)	8 to 14 (8 to 6)	6
Series 2	2068	R/L1, S/L2, T/L3, U/T1, V/T2, W/T3, -, +1, +2	M6	—	30 (3)	4
		⏚	M6	—	8 (8)	8

IMPULSE®•G+ & VG+		Terminal Signal	Terminal Screw	Tightening Torque N. m (lb.in.)	Possible Gauges mm^2 (AWG/ kcmil)	Recommended Gauge mm^2 (AWG/ kcmil)
Series 4	2060	R/L1, S/L2, T/L3, -, +1, +2	M8	9 to 11 (79.7 to 97.4)	22 to 30 (4 to 3)	4 to 2
		U/T1, V/T2, W/T3,	M8	9 to 11 (79.7 to 97.4)	22 to 30 (4 to 3)	4 to 2
		B1, B2	M5	2 to 2.5 (17.7 to 22.1)	8 to 14 (8 to 6)	–
		⏚	M6	4 to 6 (35.4 to 53.1)	14 to 22 (6 to 4)	6
Series 4	2075	R/L1, S/L2, T/L3, -, +1, +2	M8	9 to 11 (79.7 to 97.4)	30 to 38 (3 to 2)	4 to 2
		U/T1, V/T2, W/T3	M8	9 to 11 (79.7 to 97.4)	30 to 38 (3 to 2)	4 to 2)
		B1, B2	M5	2 to 2.5 (17.7 to 22.1)	14 (6)	—
		⏚	M6	4 to 6 (35.4 to 53.1)	14 to 22 (6 to 4)	6
Series 2	2080	R/L1, S/L2, T/L3, U/T1, V/T2, W/T3, -, +1, +2, +3 R1/L11, S1/L21, T1/ L31	M8	—	30 (3)	4
		⏚	M6	—	14 (6)	8
		r, ⏚	M4	—	0.5 to 5.5 (20 to 10)	—
Series 4	2085	R/L1, S/L2, T/L3, U/T1, V/T2, W/T3	M8	9 to 11 (79.7 to 97.4)	30 to 50 (3 to 1/0)	2 to 1/0
		-, +1	M8	9 to 11 (79.7 to 97.4)	38 to 50 (2 to 1)	—
		B1, B2	M8	9 to 11 (79.7 to 97.4)	14 to 50 (6 to 1)	—
		⏚	M8	9 to 11 (79.7 to 97.4)	14 to 22 (6 to 4)	6)
Series 4	2115	R/L1, S/L2, T/L3, U/T1, V/T2, W/T3	M10	18 to 23 (159 to 204)	50 to 60 (1 to 2/0)	2 to 1/0
		-, +1	M10	18 to 23 (159 to 204)	50 to 80 (1/0 to 3/0)	—
		B1, B2	M10	18 to 23 (159 to 204)	22 to 60 (4 to 2/0)	—
		⏚	M8	9 to 11 (79.7 to 97.4)	22 (4)	4

IMPULSE®•G+ & VG+		Terminal Signal	Terminal Screw	Tightening Torque N. m (lb.in.)	Possible Gauges mm^2 (AWG/ kcmil)	Recommended Gauge mm^2 (AWG/ kcmil)
Series 2	2130	R/L1, S/L2, T/L3, U/T1, V/T2, W/T3, -, +1, R1/L11, S1/L21, T1/L31	M10	—	100 (4/0)	1/0
		—, +3	M8	—	22 (4)	—
		⏚	M8	—	22 (4)	6
		r, ⏚	M4	—	0.5 to 5.5 (20 to 10)	—
Series 4	2145	R/L1, S/L2, T/L3, U/T1, V/T2, W/T3	M10	18 to 23 (159 to 204)	60 to 20 (2/0 to 4/0)	1/0 to 2/0
		-, +1	M10	18 to 23 (159 to 204)	50 to 120 (1 to 4/0)	1/0 to 2/0
		+3	M10	18 to 23 (159 to 204)	50 to 120 (1 to 4/0)	—
		⏚	M8	18 to 23 (159 to 204)	22 to 70 (4 to 2/0)	4
Series 2	2160	R/L1, S/L2, T/L3, U/T1, V/T2, W/T3, -, +1, R1/L11, S1/L21, T1/L31	M10	—	60 x 2P (1/0 x 2P)	2/0
		+3	M8	—	22 (4)	—
		⏚	M8	—	22 (4)	6
		r, ⏚	M4	—	0.5 to 5.5 (20 to 10)	—
Series 4	2180	R/L1, S/L2, T/L3	M10	18 to 23 (159 to 204)	1/0 to 2/0	1/0×2P
		U/T1, V/T2, W/T3	M10	18 to 23 (159 to 204)	1/0 to 2/0	1/0×2P
		-, +1	M10	18 to 23 (159 to 204)	1 to 4/0	—
		+3	M10	18 to 23 (159 to 204)	1/0 to 4/0	—
		⏚	M10	18 to 23 (159 to 204)	4 to 1/0	4

IMPULSE®•G+ & VG+		Terminal Signal	Terminal Screw	Tightening Torque N. m (lb.in.)	Possible Gauges mm^2 (AWG/ kcmil)	Recommended Gauge mm^2 (AWG/ kcmil)
Series 2	2224	R/L1, S/L2, T/L3, U/T1, V/T2, W/T3,	M10	—	60 x 2P (1/0 x 2P)	(2) 1/0
		-, +3	M8	—	30 (3)	—
		⏚	M8	—	30 (3)	4
		r, ⏚	M4	—	0.5 to 5.5 (20 to 10)	—
Series 4	2215	R/L1, S/L2, T/L3	M12	32 to 40 (283 to 354)	95 to 150 (3/0 to 300)	250 2-2/0
		U/T1, V/T2, W/T3	M12	32 to 40 (283 to 354)	95 to 150 (3/0 to 300)	250 2-2/0
		-, +1	M12	32 to 40 (283 to 354)	95 to 150 (3/0 to 300)	—
		+3	M10	18 to 23 (159 to 204)	35 to 150 (2 to 300)	—
		⏚	M12	32 to 40 (283 to 354)	35 to 150 (2 to 300)	4)
Series 2	2300	R/L1, S/L2, T/L3, U/T1, V/T2, W/T3	M12	—	100 x 2p (4/0 x 2P)	(2) 1/0
		-, +3	M8	—	50 (1)	—
		⏚	M8	—	50 (1)	2
		r, ⏚	M4	—	0.5 to 5.5 (20 to 10)	—
Series 4	2283	R/L1, S/L2, T/L3	M12	32 to 40 (283 to 354)	95 to 150 (3/0 to 300)	350 2-3/0
		U/T1, V/T2, W/T3	M12	32 to 40 (283 to 354)	95 to 150 (3/0 to 300)	350 2-3/0
		-, +1	M12	32 to 40 (283 to 354)	95 to 150 (3/0 to 300)	—
		+3	M10	18 to 23 (159 to 204)	95 to 150 (3/0 to 300)	—
		⏚	M12	32 to 40 (283 to 354)	35 to 150 (2 to 300)	2

IMPULSE®•G+ & VG+		Terminal Signal	Terminal Screw	Tightening Torque N. m (lb.in.)	Possible Gauges mm^2 (AWG/ kcmil)	Recommended Gauge mm^2 (AWG/ kcmil)
Series 2	4001 4003	R/L1, S/L2, T/L3, U/T1, V/T2, W/T3, -, +1, +2,?B1, B2, ⏚	M4	—	2 to 5.5 (14 to 10)	12
Series 4	4001 4003	R/L1, S/L2, T/L3, U/T1, V/T2, W/T3, -, +1, +2, B1, B2, ⏚	M4	1.2 to 1.5 (10.6 to 13.2)	14 to 10	14 to 10, 12 (Ground)
Series 2	4005	R/L1, S/L2, T/L3, U/T1, V/T2, W/T3, -, +1, +2, B1, B2, ⏚	M4	—	2 to 5.5 (14 to 10)	12
Series 4	4004 4005	R/L1, S/L2, T/L3, U/T1, V/T2, W/T3, -, +1, +2, B1, B2	M4	1.2 to 1.5 (10.6 to 13.2)	14 to10	14 to 10
		⏚	M4	1.2 to 1.5 (10.6 to 13.2)	14 to 10	10
Series 2	4008	R/L1, S/L2, T/L3, U/T1, V/T2, W/T3, -, +1, +2, B1, B2	M4	—	2 to 5.5 (14 to 10)	12
		⏚	M4	—	3.5 to 5.5 (12 to 10)	12
Series 4	4009	R/L1, S/L2, T/L3, U/T1, V/T2, W/T3, -, +1, +2, B1, B2	M4	1.2 to 1.5 (10.6 to 13.3)	2 to 5.5 (14 to 10)	
		⏚	M4	1.2 to 1.5 (10.6 to 13.3)	2 to 5.5 (14 to 10)	
Series 2	4014	R/L1, S/L2, T/L3, U/T1, V/T2, W/T3, -, +1, +2, B1, B2 ⏚	M4	—	3.5 to 5.5 (12 to 10)	12, 10 (ground)
Series 4	4014	R/L1, S/L2, T/L3, U/T1, V/T2, W/T3, -, +1, +2	M4	1.2 to 1.5 (10.6 to 13.2)	12 to 6	12 to 6
		B1, B2	M4	1.2 to 1.5 (10.6 to 13.2)	12 to 6	—
		⏚	M5	2 to 2.5 (17.7 to 22.1)	14 to 10	10

IMPULSE®•G+ & VG+		Terminal Signal	Terminal Screw	Tightening Torque N. m (lb.in.)	Possible Gauges mm^2 (AWG/ kcmil)	Recommended Gauge mm^2 (AWG/ kcmil)
Series 2	4021	R/L1, S/L2, T/L3, U/T1, V/T2, W/T3, -, +1, +2, B1, B2 ⏚	M4	—	8 to 14 (8 to 6)	12, 10 (ground)
Series 4	4018	R/L1, S/L2, T/L3, U/T1, V/T2, W/T3, -, +1, +2	M4	1.2 to 1.5 (10.6 to 13.3)	10 to 6, 12 to 6 (-, +1, +2)	10 to 6
		B1, B2	M4	1.2 to 1.5 (10.6 to 13.3)	12 to 10	—
		⏚	M5	2 to 2.5 (17.7 to 22.1)	12 to 10	10
Series 2	4027	R/L1, S/L2, T/L3, U/T1, V/T2, W/T3, -, +1, +2, B1, B2	M5	—	8 to 14 (8 to 6)	10
		⏚	M5	—	8 (8)	10
Series 4	4024	R/L1, S/L2, T/L3, -, +1, +2	M5	2 to 2.5 (17.7 to 22.1)	8 to 6, 10 to 6 (-, +1, +2)	8 to 6
		U/T1, V/T2, W/T3	M5	2 to 2.5 (17.7 to 22.1)	10 to 6	8 to 6
		B1, B2	M5	2 to 2.5 (17.7 to 22.1)	10 to 8	—
		⏚	M6	4 to 6 (35.4 to 53.1)	10 to 8	8
Series 2	4034	R/L1, S/L2, T/L3, U/T1, V/T2, W/T3, -, +1, +2, B1, B2	M5	—	8 to 14 (8 to 6)	10
		⏚	M6	—	8 (8)	10
Series 4	4031	R/L1, S/L2, T/L3, U/T1, V/T2, W/T3	M5	2 to 2.5 (17.7 to 22.1)	8 to 6	8 to 6
		-, +1, +2	M5	2 to 2.5 (17.7 to 22.1)	8 to 6	—
		B1, B2	M5	2 to 2.5 (17.7 to 22.1)	10 to 8	—
		⏚	M6	4 to 6 (35.4 to 53.1)	10 to 6	6
Series 2	4041	R/L1, S/L2, T/L3, U/T1, V/T2, W/T3, -, +1, +2, +3	M6	—	14 (6)	8
		⏚	M8	—	8 (8)	10
		r, ⏚	M4	—	0.5 to 5.5 (20 to 10)	—

IMPULSE®•G+ & VG+		Terminal Signal	Terminal Screw	Tightening Torque N. m (lb.in.)	Possible Gauges mm^2 (AWG/ kcmil)	Recommended Gauge mm^2 (AWG/ kcmil)
Series 4	4039	R/L1, S/L2, T/L3, U/T1, V/T2, W/T3, -, +1, +2	M6	4 to 6 (35.4 to 53.1)	6 to 4	6 to 4
		B1, B2	M5	2 to 2.5 (17.7 to 22.1)	10 to 8	—
		⏚	M6	4 to 6 (35.4 to 53.1)	8 to 6	6
Series 2	4052	R/L1, S/L2, T/L3, U/T1, V/T2, W/T3, -, +1, +3,	M6	—	22 (4)	6
		⏚	M8	—	8 (8)	8
		r, ⏚	M4	—	0.5 to 5.5 (20 to 10)	—
Series 4	4045	R/L1, S/L2, T/L3, U/T1, V/T2, W/T3	M8	9 to 11 (79.7 to 97.4)	6 to 4	6 to 4
		-, +1	M8	9 to 11 (79.7 to 97.4)	6 to 1	—
		B1, B2	M8	9 to 11 (79.7 to 97.4)	8 to 4	—
		⏚	M8	9 to 11 (79.7 to 97.4)	8 to 6	6
Series 2	4065	R/L1, S/L2, T/L3, U/T1, V/T2, W/T3, -, +1, +3,	M8	—	22 (4)	4
		⏚	M8	—	8 (8)	8
		r, ⏚	M8	—	0.5 to 5.5 (20 to 10)	—
Series 4	4060	R/L1, S/L2, T/L3, U/T1, V/T2, W/T3	M8	9 to 11 (79.7 to 97.4)	4 to 3	4 to 2
		-, +1 B1, B2	M8	9 to 11 (79.7 to 97.4)	4 to 1, 6 to 3 (B1, B2)	—
		⏚	M8	9 to 11 (79.7 to 97.4)	6	6
Series 2	4080	R/L1, S/L2, T/L3, U/T1, V/T2, W/T3, -, +1, +2, +3	M8	—	30 (3)	4
		⏚	M8	—	14 (6)	8
		r, ⏚	M4	—	0.5 to 5.5 (20 to 10)	—

IMPULSE®•G+ & VG+		Terminal Signal	Terminal Screw	Tightening Torque N. m (lb.in.)	Possible Gauges mm^2 (AWG/ kcmil)	Recommended Gauge mm^2 (AWG/ kcmil)
Series 4	4075	R/L1, S/L2, T/L3, U/T1, V/T2, W/T3	M8	9 to 11 (79.7 to 97.4)	3 to 1/0	4 to 2
		-, +1	M8	9 to 11 (79.7 to 97.4)	3 to 1/0	—
		+3	M8	9 to 11 (79.7 to 97.4)	6 to 1/0	—
		⏚	M8	9 to 11 (79.7 to 97.4)	6 to 4	4
Series 2	4096	R/L1, S/L2, T/L3, U/T1, V/T2, W/T3, -, +1, +2, +3	M8	—	50 (1)	2
		⏚	M8	—	14 (6)	6
		r, ⏚	M4	—	0.5 to 5.5 (20 to 10)	—
Series 4	4091	R/L1, S/L2, T/L3, U/T1, V/T2, W/T3	M8	9 to 11 (79.7 to 97.4)	2 to 1/0	2 to 1/0
		-, +1	M8	9 to 11 (79.7 to 97.4)	3 to 1/0	—
		+3	M8	9 to 11 (79.7 to 97.4)	4 to 1/0	—
		⏚	M8	9 to 11 (79.7 to 97.4)	6 to 4	4
Series 2	4128	R/L1, S/L2, T/L3, U/T1, V/T2, W/T3	M10	—	100 (4/0)	1/0
		+3	M8	—	22 (4)	—
		⏚	M8	—	22 (4)	6
		r, ⏚200, ⏚400	M4	—	0.5 to 5.5 (20 to 10)	—
Series 4	4112	R/L1, S/L2, T/L3	M10	18 to 23 (159 to 204)	1/0 to 4/0	1/0 to 2/0
		U/T1, V/T2, W/T3	M10	18 to 23 (159 to 204)	1/0 to 4/0	1/0 to 2/0
		-, +1	M10	18 to 23 (159 to 204)	1/0 to 4/0	—
		+3	M10	18 to 23 (159 to 204)	3 to 4/0	—
		⏚	M10	18 to 23 (159 to 204)	4	4
Series 2	4165	R/L1, S/L2, T/L3, U/T1, V/T2, W/T3	M10	—	60 x 2P (1/0 x 2P)	2/0
		-, +3	M8	—	22 (4)	—
		⏚	M8	—	22 (4)	4
		r, ⏚200, ⏚400	M4	—	0.5 to 5.5 (20 to 10)	—

IMPULSE®•G+ & VG+		Terminal Signal	Terminal Screw	Tightening Torque N. m (lb.in.)	Possible Gauges mm^2 (AWG/ kcmil)	Recommended Gauge mm^2 (AWG/ kcmil)
Series 4	4150	R/L1, S/L2, T/L3	M10	18 to 23 (159 to 204)	3/0 to 4/0	3/0 to 4/0
		U/T1, V/T2, W/T3	M10	18 to 23 (159 to 204)	3/0 to 4/0	3/0 to 4/0
		-, +1	M10	18 to 23 (159 to 204)	1 to 4/0	—
		+3	M10	18 to 23 (159 to 204)	1/0 to 4/0	—
		⏚	M10	18 to 23 (159 to 204)	4 to 2	4
Series 4	4180	R/L1, S/L2, T/L3	M10	18 to 23 (159 to 204)	2 to 300	250 2-2/0
		U/T1, V/T2, W/T3	M10	18 to 23 (159 to 204)	2 to 300	250 2-2/0
		-, +1	M10	18 to 23 (159 to 204)	1 to 250	—
		+3	M10	18 to 23 (159 to 204)	3 to 3/0	—
		⏚	M10	18 to 23 (159 to 204)	4 to 300	4
Series 2	4224	R/L1, S/L2, T/L3, U/T1, V/T2, W/T3	M10	—	60 x 2P (1/0 to 2P)	(2) 1/0
		-, +3	M8	—	30 (3)	—
		⏚	M8	—	30 (3)	4
		r, ⊠200, ⊠400	M4	—	0.5 to 5.5 (20 to 10)	—
Series 4	4216	R/L1, S/L2, T/L3	M10	18 to 23 (159 to 204)	—	250 2-2/0
		U/T1, V/T2, W/T3	M10	18 to 23 (159 to 204)	—	250 2-2/0
		-, +1	M10	18 to 23 (159 to 204)	—	—
		+3	M10	18 to 23 (159 to 204)	—	4/0
		⏚	M10	18 to 23 (159 to 204)	—	2
Series 4	4260	R/L1, S/L2, T/L3	M12	32 to 40 (283 to 354)	2/0 to 600	350 2-3/0
		U/T1, V/T2, W/T3	M12	32 to 40 (283 to 354)	2/0 to 600	350 2-3/0
		-, +1	M12	32 to 40 (283 to 354)	3/0 to 600	—
		+3	M10	18 to 23 (159 to 204)	1 to 325	—
		⏚	M12	32 to 40 (283 to 354)	2 to 350	2

IMPULSE®•G+ & VG+		Terminal Signal	Terminal Screw	Tightening Torque N. m (lb.in.)	Possible Gauges mm^2 (AWG/ kcmil)	Recommended Gauge mm^2 (AWG/ kcmil)
Series 2	4302	R/L1, S/L2, T/L3, U/T1, V/T2, W/T3	M12	—	100 x 2P (4/0 to 2P)	(2) 1/0
		–, +3	M8	—	50 (1)	—
		⏚	M8	—	50 (1)	4
		r, ⏚200, ⏚400	M4	—	0.5 to 5.5 (20 to 10)	—
Series 4	4304	R/L1, S/L2, T/L3	M12	32 to 40 (283 to 354)	3/0 to 600	350 2-4/0
		U/T1, V/T2, W/T3	M12	32 to 40 (283 to 354)	3/0 to 600	350 2-4/0
		-, +1	M12	32 to 40 (283 to 354)	4/0 to 600	–
		+3	M10	18 to 23 (159 to 204)	3/0 to 600	–
		⏚	M12	32 to 40 (283 to 354)	1 to 350	1
Series 4	4370	R/L1, S/L2, T/L3	M12	32 to 40 (283 to 354)	4/0 to 300	500 2-250
		U/T1, V/T2, W/T3	M12	32 to 40 (283 to 354)	4/0 to 300	500 2-250
		-, +1	M12	32 to 40 (283 to 354)	3/0 to 300	–
		+3	M12	32 to 40 (283 to 354)	3/0 to 300	–
		⏚	M12	32 to 40 (283 to 354)	1 to 3/0	1
Series 2	4450	R/L1, S/L2, T/L3, U/T1, V/T2, W/T3, -, +1, +3	M16	–	325 x 2P (MCM650 x 2P)	(2) 4/0
		⏚	M16	–	50 (1/0)	1/0
		r, ⏚200, ⏚400	M6	–	0.5 to 5.5 (20 to 10)	–
Series 4	4450	R/L1, S/L2, T/L3	M12	32 to 40 (283 to 354)	3/0 to 300	500 2-300 4-3/0
		U/T1, V/T2, W/T3	M12	32 to 40 (283 to 354)	3/0 to 300	500 2-300 4-3/0
		-, +1	M12	32 to 40 (283 to 354)	1/0 to 300	–
		+3	M12	32 to 40 (283 to 354)	1/0 to 300	–
		⏚	M12	32 to 40 (283 to 354)	1/0 to 300	1/0

IMPULSE®•G+ & VG+		Terminal Signal	Terminal Screw	Tightening Torque N. m (lb.in.)	Possible Gauges mm^2 (AWG/ kcmil)	Recommended Gauge mm^2 (AWG/ kcmil)
Series 2	4605	R/L1, S/L2, T/L3 U/T1, V/T2, W/T3 -, +1, +3	M16	—	325 x 2P (MCM650 x 2P)	(2) 300 KCMIL
		⏚	M8	—	50 (1/0)	1/0
		r, ⏚200, ⏚400	M4	—	0.5 to 5.5 (20 to 10)	—
Series 4	4605	R/L1, S/L2, T/L3, U/T1, V/T2, W/T3	M12	32 to 40 (283 to 354)	4/0 to 300	2-400 4-250 4-3/0
		-, +1	M12	32 to 40 (283 to 354)	1/0 to 300	—
		+3	M12	32 to 40 (283 to 354)	1/0 to 300	—
		⏚	M12	32 to 40 (283 to 354)	2/0 to 300	2/0

IMPULSE®•G+ & VG+		Terminal Signal	Terminal Screw	Tightening Torque N. m (lb.in.)	Possible Gauges mm^2 (AWG/ kcmil)	Recommended Gauge mm^2 (AWG/ kcmil)
Series 2	5003	R/L1, S/L2, T/L3, U/T1, V/T2, W/T3	M4	—	2 to 5.5 (14 to 10)	—
		-, B1, B2	M4	—	2 to 5.5 (14 to 10)	—
		⏚	M4	—	—	—
Series 4	5001 5003	R/L1, S/L2, T/L3	M4	1.2 to 1.5 (10.6 to 13.3)	2 to 5.5 (14 to 10)	2 (14)
		U/T1, V/T2, W/T3	M4	1.2 to 1.5 (10.6 to 13.3)	2 to 5.5 (14 to 10)	2 (14)
		-, +1, +2	M4	1.2 to 1.5 (10.6 to 13.3)	2 to 5.5 (14 to 10)	—
		B1, B2	M4	1.2 to 1.5 (10.6 to 13.3)	2 to 5.5 (14 to 10)	—
		⏚	M4	1.2 to 1.5 (10.6 to 13.3)	2 to 5.5 (14 to 10)	5.5 (10)
Series 2	5004	R/L1, S/L2, T/L3, U/T1, V/T2, W/T3	M4	—	2 to 5.5 (14 to 10)	—
		-, B1, B2	M4	—	2 to 5.5 (14 to 10)	—
		⏚	M4	—	—	—

IMPULSE®•G+ & VG+		Terminal Signal	Terminal Screw	Tightening Torque N. m (lb.in.)	Possible Gauges mm^2 (AWG/ kcmil)	Recommended Gauge mm^2 (AWG/ kcmil)
Series 4	5004	R/L1, S/L2, T/L3	M4	1.2 to 1.5 (10.6 to 13.3)	2 to 5.5 (14 to 10)	2 (14)
		U/T1, V/T2, W/T3	M4	1.2 to 1.5 (10.6 to 13.3)	2 to 5.5 (14 to 10)	2 (14)
		-, +1, +2	M4	1.2 to 1.5 (10.6 to 13.3)	2 to 5.5 (14 to 10)	—
		B1, B2	M4	1.2 to 1.5 (10.6 to 13.3)	2 to 5.5 (14 to 10)	—
		⏚	M4	1.2 to 1.5 (10.6 to 13.3)	2 to 5.5 (14 to 10)	5.5 (10)
Series 2	5006	R/L1, S/L2, T/L3, U/T1, V/T2, W/T3	M4	—	2 to 5.5 (14 to 10)	—
		-, B1, B2	M4	—	2 to 5.5 (14 to 10)	—
		⏚	M4	—	3.5 to 5.5 (12 to 10)	—
Series 4	5006	R/L1, S/L2, T/L3	M4	1.2 to 1.5 (10.6 to 13.3)	2 to 5.5 (14 to 10)	2 (14)
		U/T1, V/T2, W/T3	M4	1.2 to 1.5 (10.6 to 13.3)	2 to 5.5 (14 to 10)	2 (14)
		-, +1, +2	M4	1.2 to 1.5 (10.6 to 13.3)	2 to 5.5 (14 to 10)	—
		B1, B2	M4	1.2 to 1.5 (10.6 to 13.3)	2 to 5.5 (14 to 10)	—
		⏚	M4	1.2 to 1.5 (10.6 to 13.3)	3.5 to 5.5 (12 to 10)	5.5 (10)
Series 2	5009	R/L1, S/L2, T/L3, U/T1, V/T2, W/T3	M4	—	3.5 to 5.5 (12 to 10)	—
		-, B1, B2	M4	—	3.5 to 5.5 (12 to 10)	—
		⏚	M4	—	—	—
Series 4	5009	R/L1, S/L2, T/L3	M4	1.2 to 1.5 (10.6 to 13.3)	2 to 14 (14 to 6)	5.5 (10)
		U/T1, V/T2, W/T3	M4	1.2 to 1.5 (10.6 to 13.3)	2 to 14 (14 to 6)	2 (14)
		-, +1, +2	M4	1.2 to 1.5 (10.6 to 13.3)	2 to 14 (14 to 6)	—
		B1, B2	M4	1.2 to 1.5 (10.6 to 13.3)	2 to 5.5 (14 to 10)	—
		⏚	M5	2 to 2.5 (17.7 to 22.1)	3.5 to 8 (12 to 8)	8 (8)

IMPULSE®•G+ & VG+		Terminal Signal	Terminal Screw	Tightening Torque N. m (lb.in.)	Possible Gauges mm^2 (AWG/ kcmil)	Recommended Gauge mm^2 (AWG/ kcmil)
Series 2	5012	R/L1, S/L2, T/L3, U/T1, V/T2, W/T3	M4	—	5.5 (10)	—
		-, B1, B2	M4	—	5.5 (10)	—
		⏚	M4	—	3.5 to 5.5 (12 to 10)	—
Series 4	5012	R/L1, S/L2, T/L3	M5	2 to 2.5 (17.7 to 22.1)	5.5 to 14 (10 to 6)	5.5 (10)
		U/T1, V/T2, W/T3	M5	2 to 2.5 (17.7 to 22.1)	5.5 to 14 (10 to 6)	5.5 (10)
		-, +1, +2	M5	2 to 2.5 (17.7 to 22.1)	5.5 to 14 (10 to 6)	—
		B1, B2	M5	2 to 2.5 (17.7 to 22.1)	5.5 to 8 (10 to 8)	—
		⏚	M6	4 to 6 (35.4 to 53.1)	5.5 to 8 (12 to 8)	8 (8)
Series 2	5017	R/L1, S/L2, T/L3, U/T1, V/T2, W/T3	M5	—	5.5 to 14 (10 to 6)	—
		-, B1, B2	M5	—	5.5 to 14 (10 to 6)	—
		⏚	M6	—	5.5 to 14 (10 to 6)	—
Series 4	5017	R/L1, S/L2, T/L3	M5	2 to 2.5 (17.7 to 22.1)	5.5 to 14 (10 to 6)	8 (8)
		U/T1, V/T2, W/T3	M5	2 to 2.5 (17.7 to 22.1)	5.5 to 14 (10 to 6)	14 (6)
		-, +1, +2	M5	2 to 2.5 (17.7 to 22.1)	5.5 to 14 (10 to 6)	—
		B1, B2	M5	2 to 2.5 (17.7 to 22.1)	5.5 to 8 (10 to 8)	—
		⏚	M6	4 to 6 (35.4 to 53.1)	5.5 to 14 (10 to 6)	8 (8)
Series 2	5022	R/L1, S/L2, T/L3, U/T1, V/T2, W/T3	M5	—	8 to 14 (8 to 6)	—
		-, +3	M5	—	8 to 14 (8 to 6)	—
		⏚	M6	—	—	—
Series 4	5022	R/L1, S/L2, T/L3	M6	4 to 6 (35.4 to 53.1)	14 to 20 (6 to 4)	14 (6)
		U/T1, V/T2, W/T3	M6	4 to 6 (35.4 to 53.1)	14 to 20 (6 to 4)	14 (6)
		-, +1, +2	M6	4 to 6 (35.4 to 53.1)	14 to 20 (6 to 4)	—
		B1, B2	M5	2 to 2.5 (17.7 to 22.1)	10 to 8 (5.5 to 8)	—
		⏚	M6	4 to 6 (35.4 to 53.1)	5.5 to 14 (10 to 6)	14 (6)

IMPULSE®•G+ & VG+		Terminal Signal	Terminal Screw	Tightening Torque N. m (lb.in.)	Possible Gauges mm^2 (AWG/ kcmil)	Recommended Gauge mm^2 (AWG/ kcmil)
Series 2	5027	R/L1, S/L2, T/L3, U/T1, V/T2, W/T3, -, +3	M6	—	8 to 14 (8 to 6)	—
		⏚	Pressure Lug	—	5.5 to 14 (10 to 6)	—
		r, ⏚	M4	—	2 to 5.5	—
Series 4	5027	R/L1, S/L2, T/L3	M6	4 to 6 (35.4 to 53.1)	14 to 20 (6 to 4)	14 (6)
		U/T1, V/T2, W/T3	M6	4 to 6 (35.4 to 53.1)	14 to 20 (6 to 4)	14 (6)
		-, +1, +2	M6	4 to 6 (35.4 to 53.1)	14 to 20 (6 to 4)	—
		B1, B2	M5	2 to 2.5 (17.7 to 22.1)	10 to 8 (5.5 to 8)	—
		⏚	M6	4 to 6 (35.4 to 53.1)	5.5 to 14 (10 to 6)	14 (6)
Series 2	5032	R/L1, S/L2, T/L3, U/T1, V/T2, W/T3, -, +3	M6	—	8 to 14 (8 to 6)	—
		⏚	Pressure Lug	—	5.5 to 14 (10 to 6)	—
		r, ⏚	M4	—	2 to 5.5	—
Series 4	5032	R/L1, S/L2, T/L3	M8	9 to 11 (79.7 to 97.4)	5.5 to 30 (10 to 3)	14 (6)
		U/T1, V/T2, W/T3		9 to 11 (79.7 to 97.4)	5.5 to 30 (10 to 3)	14 (6)
		-, +1, +2	M8	9 to 11 (79.7 to 97.4)	14 to 50 (6 to 1)	—
		B1, B2		9 to 11 (79.7 to 97.4)	3 to 30 (12 to 3)	—
		⏚	M8	9 to 11 (79.7 to 97.4)	14 (6)	14 (6)
Series 2	5041	R/L1, S/L2, T/L3, U/T1, V/T2, W/T3, -, +3	M8	—	14 to 50 (6 to 1/0)	—
		⏚	Pressure Lug	—	8 to 30 (8 to 2)	—
		r, ⏚	M4	—	2 to 5.5	—

IMPULSE®•G+ & VG+		Terminal Signal	Terminal Screw	Tightening Torque N. m (lb.in.)	Possible Gauges mm^2 (AWG/ kcmil)	Recommended Gauge mm^2 (AWG/ kcmil)
Series 4	5041	R/L1, S/L2, T/L3	M8	9 to 11 (79.7 to 97.4)	5.5 to 30 (10 to 3)	20 (4)
		U/T1, V/T2, W/T3	M8	9 to 11 (79.7 to 97.4)	5.5 to 30 (10 to 3)	14 (6)
		-, +1, +2	M8	9 to 11 (79.7 to 97.4)	14 to 50 (6 to 1)	—
		B1, B2	M8	9 to 11 (79.7 to 97.4)	8 to 30 (8 to 3)	—
		⏚	M8	9 to 11 (79.7 to 97.4)	14 (6)	14 (6)
Series 2	5052	R/L1, S/L2, T/L3, U/T1, V/T2, W/T3, -, +3	M8	—	22 to 50 (4 to 1/0)	—
		⏚	Pressure Lug	—	8 to 30 (8 to 2)	—
		r, ⏚	M4	—	2 to 5.5	—
Series 4	5052	R/L1, S/L2, T/L3	M10	18 to 23 (159 to 204)	5.5 to 105 (10 to 4/ 0)	20 (4)
		U/T1, V/T2, W/T3	M10	18 to 23 (159 to 204)	5.5 to 105 (10 to 4/ 0)	20 (4)
		-, +1, +2	M10	18 to 23 (159 to 204)	20 to 105 (4 to 4/0)	—
		B1, B2	M10	18 to 23 (159 to 204)	14 to 105 (6 to 4/0)	—
		⏚	M10	18 to 23 (159 to 204)		20 (4)
Series 2	5062	R/L1, S/L2, T/L3, U/T1, V/T2, W/T3, -, +3	M8	—	30 to 50 (3 to 1/0)	—
		⏚	Pressure Lug	—	8 to 30 (8 to 2)	—
		r, ⏚	M4	—	2 to 5.5	—
Series 4	5062	R/L1, S/L2, T/L3	M10	18 to 23 (159 to 204)	5.5 to 105 (10 to 4/ 0)	30 (3)
		U/T1, V/T2, W/T3	M10	18 to 23 (159 to 204)	5.5 to 105 (10 to 4/ 0)	30 (3)
		-, +1, +2	M10	18 to 23 (159 to 204)	30 to 105 (3 to 4/0)	—
		B1, B2	M10	18 to 23 (159 to 204)	14 to 105 (6 to 4/0)	—
		⏚	M10	18 to 23 (159 to 204)	20 (4)	20 (4)

IMPULSE®•G+ & VG+		Terminal Signal	Terminal Screw	Tightening Torque N. m (lb.in.)	Possible Gauges mm^2 (AWG/ kcmil)	Recommended Gauge mm^2 (AWG/ kcmil)
Series 2	5077	R/L1, S/L2, T/L3, U/T1, V/T2, W/T3, -, +3	M8	—	30 to 50 (2 to 1/0)	—
		⏚	Pressure Lug	—	22 to 30 (6 to 2)	—
		r, ⏚	M4	—	2 to 5.5	—
Series 4	5077	R/L1, S/L2, T/L3	M10	18 to 23 (159 to 204)	5.5 to 105 (10 to 4/ 0)	50 (1/0)
		U/T1, V/T2, W/T3	M10	18 to 23 (159 to 204)	5.5 to 105 (10 to 4/ 0)	50 (1)
		-, +1, +2	M10	18 to 23 (159 to 204)	40 to 105 (2 to 4/0)	—
		B1, B2	M10	18 to 23 (159 to 204)	20 to 105 (4 to 4/0)	—
		⏚	M10	18 to 23 (159 to 204)	20 (4)	20 (4)
Series 2	5099	R/L1, S/L2, T/L3, U/T1, V/T2, W/T3, -, +3	M8	—	50 to 60 (2/0 to 1// 0)	—
		⏚	Pressure Lug	—	22 to 30 (6 to 2)	—
		r, ⏚	M4	—	2 to 5.5	—
Series 4	5099	R/L1, S/L2, T/L3	—	—	—	—
		U/T1, V/T2, W/T3	—	—	—	—
		-, +1, +2	—	—	—	—
		B1, B2	—	—	—	—
		⏚	—	—	—	—
Series 2	5130	R/L1, S/L2, T/L3, U/T1, V/T2, W/T3, -, +3	M10	—	80 to 150 (3/0 to 300)	—
		⏚	Pressure Lug	—	22 to 60 (4 to 2/0)	—
		r, ⏚	M4	—	2 to 5.5	—
Series 4	5130	R/L1, S/L2, T/L3	—	—	—	—
		U/T1, V/T2, W/T3	—	—	—	—
		-, +1, +2	—	—	—	—
		B1, B2	—	—	—	—
		⏚	—	—	—	—

IMPULSE®•G+ & VG+		Terminal Signal	Terminal Screw	Tightening Torque N. m (lb.in.)	Possible Gauges mm^2 (AWG/ kcmil)	Recommended Gauge mm^2 (AWG/ kcmil)
Series 2	5172	R/L1, S/L2, T/L3, U/T1, V/T2, W/T3, -, +3	M12	—	150 to 200 (300 to 400)	—
		⏚	Pressure Lug	—	22 to 60 (4 to 2/0)	—
		r, ⏚	M4	—	2 to 5.5	—
Series 4	5172	R/L1, S/L2, T/L3	—	—	—	—
		U/T1, V/T2, W/T3	—	—	—	—
		-, +1, +2	—	—	—	—
		B1, B2	—	—	—	—
		⏚	—	—	—	—
Series 2	5200	R/L1, S/L2, T/L3, U/T1, V/T2, W/T3, -, +3	M4	—	180 to 200 (350 to 400)	—
		⏚	Pressure Lug	—	30 to 60 (3 to 2/0)	—
		r, ⏚	M4	—	2 to 5.5	—
Series 4	5200	R/L1, S/L2, T/L3	—	—	—	—
		U/T1, V/T2, W/T3	—	—	—	—
		-, +1, +2	—	—	—	—
		B1, B2	—	—	—	—
		⏚	—	—	—	—

1.7 Dimensions, Installation Space and Substitution Material

Drive Dimension Comparison

230V Class

<table>
<tr><th rowspan="3">Series 2 Model -AFG+ & -FVG+</th><th rowspan="3">Series 4 Model -G+S4 & -VG+S4</th><th colspan="6">Outer Dimensions (in)</th></tr>
<tr><th colspan="3">IMPULSE®•G+ & VG+ Series 2</th><th colspan="3">IMPULSE®•G+ & VG+ Series 4</th></tr>
<tr><th>W</th><th>H</th><th>D</th><th>W</th><th>H</th><th>D</th></tr>
<tr><td>N/A</td><td>2003</td><td>--</td><td>--</td><td>--</td><td rowspan="8">5.51</td><td rowspan="8">10.24</td><td rowspan="5">5.79</td></tr>
<tr><td>2006</td><td>2005</td><td rowspan="5">5.51</td><td rowspan="5">11.02</td><td rowspan="2">6.30</td></tr>
<tr><td rowspan="2">2008</td><td>2007</td></tr>
<tr><td>2008</td></tr>
<tr><td rowspan="2">2011</td><td>2011</td><td rowspan="3">7.09</td></tr>
<tr><td>2014</td><td rowspan="2">6.46</td></tr>
<tr><td>2017</td><td>2017</td></tr>
<tr><td>2025</td><td>2025</td><td rowspan="2">7.87</td><td rowspan="2">11.81</td><td rowspan="2">8.07</td><td rowspan="2">6.57</td></tr>
<tr><td>2033</td><td>2033</td></tr>
<tr><td>2054</td><td>2047</td><td rowspan="2">9.84</td><td rowspan="2">14.96</td><td rowspan="2">8.86</td><td>7.09</td><td>11.81</td><td>7.36</td></tr>
<tr><td>2068</td><td>2060</td><td rowspan="2">8.66</td><td rowspan="2">13.78</td><td rowspan="2">7.76</td></tr>
<tr><td rowspan="2">N/A</td><td>2075</td><td rowspan="2">N/A</td><td rowspan="2">N/A</td><td rowspan="2">N/A</td></tr>
<tr><td rowspan="2">2085</td><td>10.00</td><td>15.75</td><td rowspan="3">10.16</td></tr>
<tr><td>2080</td><td>12.80</td><td>17.72</td><td>11.22</td><td></td><td></td></tr>
<tr><td rowspan="2">2130</td><td>2115</td><td rowspan="3">16.73</td><td rowspan="3">16.73</td><td rowspan="4">13.78</td><td>10.98</td><td>17.72</td></tr>
<tr><td>2145</td><td rowspan="2">12.95</td><td rowspan="2">21.65</td><td rowspan="2">11.14</td></tr>
<tr><td>2160</td><td>2180</td></tr>
<tr><td>2224</td><td>2215</td><td>18.70</td><td>31.50</td><td rowspan="2">17.72</td><td rowspan="2">27.76</td><td rowspan="2">12.99</td></tr>
<tr><td>2300</td><td>2283</td><td>22.64</td><td>36.42</td><td>15.75</td></tr>
<tr><td>N/A</td><td>2346</td><td>--</td><td>--</td><td>--</td><td rowspan="2">19.69</td><td rowspan="2">19.69</td><td rowspan="2">13.78</td></tr>
<tr><td>N/A</td><td>2415</td><td>--</td><td>--</td><td>--</td></tr>
</table>

460V Class

<table>
<tr><th rowspan="3">Series 2 Model -AFG+ & -FVG+</th><th rowspan="3">Series 4 Model -G+S4 & -VG+S4</th><th colspan="6">Outer Dimensions (in)</th></tr>
<tr><th colspan="3">IMPULSE®•G+ & VG+ Series 2</th><th colspan="3">IMPULSE®•G+ & VG+ Series 4</th></tr>
<tr><th>W</th><th>H</th><th>D</th><th>W</th><th>H</th><th>D</th></tr>
<tr><td>4001</td><td>4001</td><td rowspan="7">5.51</td><td rowspan="7">11.02</td><td rowspan="2">6.30</td><td rowspan="8">5.51</td><td rowspan="8">10.24</td><td rowspan="3">5.79</td></tr>
<tr><td>4003</td><td>4003</td></tr>
<tr><td rowspan="2">4005</td><td>4004</td><td rowspan="5">7.09</td></tr>
<tr><td>4005</td><td rowspan="3">6.46</td></tr>
<tr><td rowspan="2">4008</td><td>4007</td></tr>
<tr><td>4009</td></tr>
<tr><td>4011</td><td>4014</td><td rowspan="3">6.57</td></tr>
<tr><td>4014</td><td>4018</td><td rowspan="2">7.87</td><td rowspan="2">11.81</td><td rowspan="2">8.07</td></tr>
<tr><td>4021</td><td>4024</td><td rowspan="2">7.09</td><td rowspan="2">11.81</td></tr>
<tr><td>4027</td><td>4031</td><td rowspan="2">9.84</td><td rowspan="2">14.96</td><td rowspan="2">8.86</td><td>7.36</td></tr>
<tr><td>4034</td><td>4039</td><td>8.66</td><td>13.78</td><td>7.76</td></tr>
<tr><td>4041</td><td>4045</td><td rowspan="5">12.80</td><td rowspan="2">17.72</td><td rowspan="5">11.22</td><td>10.00</td><td>15.75</td><td rowspan="3">10.16</td></tr>
<tr><td>4052</td><td>4060</td><td>10.98</td><td>17.72</td></tr>
<tr><td>4065</td><td>4075</td><td rowspan="3">24.61</td><td rowspan="3">12.95</td><td rowspan="2">20.08</td></tr>
<tr><td>4080</td><td>4091</td></tr>
<tr><td>4096</td><td>4112</td><td rowspan="2">21.65</td><td rowspan="2">11.14</td></tr>
<tr><td>4128</td><td>4150</td><td rowspan="2">17.91</td><td rowspan="2">32.28</td><td rowspan="2">13.78</td></tr>
<tr><td>4165</td><td rowspan="2">4180</td><td>17.72</td><td>27.76</td><td>12.99</td></tr>
<tr><td rowspan="2">4224</td><td rowspan="3">22.64</td><td rowspan="3">36.42</td><td rowspan="2">14.76</td><td></td><td></td><td></td></tr>
<tr><td>4216</td><td rowspan="4">19.69</td><td rowspan="3">31.50</td><td rowspan="3">13.78</td></tr>
<tr><td rowspan="2">4302</td><td>4260</td><td rowspan="2">15.75</td></tr>
<tr><td>4304</td></tr>
<tr><td>N/A</td><td>4370</td><td>N/A</td><td>N/A</td><td></td><td>37.40</td><td rowspan="3">14.57</td></tr>
<tr><td>4450</td><td>4450</td><td>37.40</td><td>57.09</td><td>17.13</td><td rowspan="2">26.38</td><td rowspan="2">44.88</td></tr>
<tr><td>4605</td><td>4605</td><td>37.80</td><td>62.99</td><td>17.91</td></tr>
</table>

575V Class

<table>
<tr><th rowspan="3">Series 2 Model -AFG+ & -FVG+</th><th rowspan="3">Series 4 Model -G+S4 & -VG+S4</th><th colspan="6">Outer Dimensions (in)</th></tr>
<tr><th colspan="3">IMPULSE®•G+ & VG+ Series 2</th><th colspan="3">IMPULSE®•G+ & VG+ Series 4</th></tr>
<tr><th>W</th><th>H</th><th>D</th><th>W</th><th>H</th><th>D</th></tr>
<tr><td rowspan="2">5003</td><td>5001</td><td rowspan="3">5.51</td><td rowspan="3">11.02</td><td rowspan="3">7.09</td><td rowspan="5">5.51</td><td rowspan="5">10.24</td><td rowspan="2">5.79</td></tr>
<tr><td>5003</td></tr>
<tr><td>5004</td><td>5004</td><td rowspan="2">6.46</td></tr>
<tr><td>5006</td><td>5006</td><td rowspan="4">7.87</td><td rowspan="4">11.81</td><td rowspan="4">8.07</td></tr>
<tr><td>5009</td><td>5009</td><td>6.57</td></tr>
<tr><td>5012</td><td>5012</td><td rowspan="2">7.09</td><td rowspan="2">11.81</td><td rowspan="2">7.36</td></tr>
<tr><td>5017</td><td>5017</td><td rowspan="2">9.84</td><td rowspan="2">14.96</td><td rowspan="2">8.86</td></tr>
<tr><td>5022</td><td>5022</td><td rowspan="2">8.66</td><td rowspan="2">13.78</td><td rowspan="2">7.76</td></tr>
<tr><td>5027</td><td>5027</td><td rowspan="2">15.75</td><td rowspan="2">29.53</td><td rowspan="2">11.22</td></tr>
<tr><td>5032</td><td>5032</td><td rowspan="2">10.98</td><td rowspan="2">17.72</td><td rowspan="2">10.16</td></tr>
<tr><td>5041</td><td>5041</td><td rowspan="4">22.64</td><td rowspan="3">33.46</td><td rowspan="3">11.81</td></tr>
<tr><td>5052</td><td>5052</td><td rowspan="3">12.95</td><td rowspan="3">21.65</td><td rowspan="3">11.14</td></tr>
<tr><td>5062</td><td>5062</td></tr>
<tr><td>5077</td><td>5077</td><td>41.34</td><td rowspan="2">12.80</td></tr>
<tr><td>5099</td><td>5099</td><td>41.97</td><td rowspan="2">17.92</td><td rowspan="2">27.76</td><td rowspan="2">12.99</td></tr>
<tr><td>5130</td><td>5130</td><td rowspan="3">22.80</td><td>57.68</td><td>12.99</td></tr>
<tr><td>5172</td><td>5172</td><td rowspan="2">77.43</td><td rowspan="2">13.98</td><td rowspan="2">19.69</td><td rowspan="2">31.50</td><td rowspan="2">13.78</td></tr>
<tr><td>5200</td><td>5200</td></tr>
</table>

IMPULSE®•G+/VG+ Series 4 Drive Options

Category	Option Name	Model Number
Network Communication	Profibus-DP	SI-P3
	EtherNet/IP	SI-EN3
	Modbus TCP/IP	SI-EM3
	DeviceNET	SI-N3
Motor Feedback	Line Driver PG	PG-X3
	Open Collector PG	PG-B3
	Serial Absolute FB	FG-F3
	Resolver Feedback	PG-RT3
Input/Output	Analog Input	AI-A3
	Analog Output	AO-A3
	Digital Input	DI-A3
	Digital Output	DO-A3
	24 VAC Interface Board	(Contact factory)
	48 VAC Interface Board	(Contact factory)
	24 VDC Interface Board	(Contact factory)
Control Power Unit	24 V Control Power Unit	PS-A10H for 480 V and 600 V class PS-A10L for 240 V class
Parameter Management	Y-Stick USB Copy Unit	JVOP-181
Operator	LCD Operator	JVOP-180
Remote Keypad Mounting Kit	LCD Operator Remote Mount Kit	S4-RMT-OPEN-KIT

IMPULSE®•G+ Series 2 Wiring Diagram

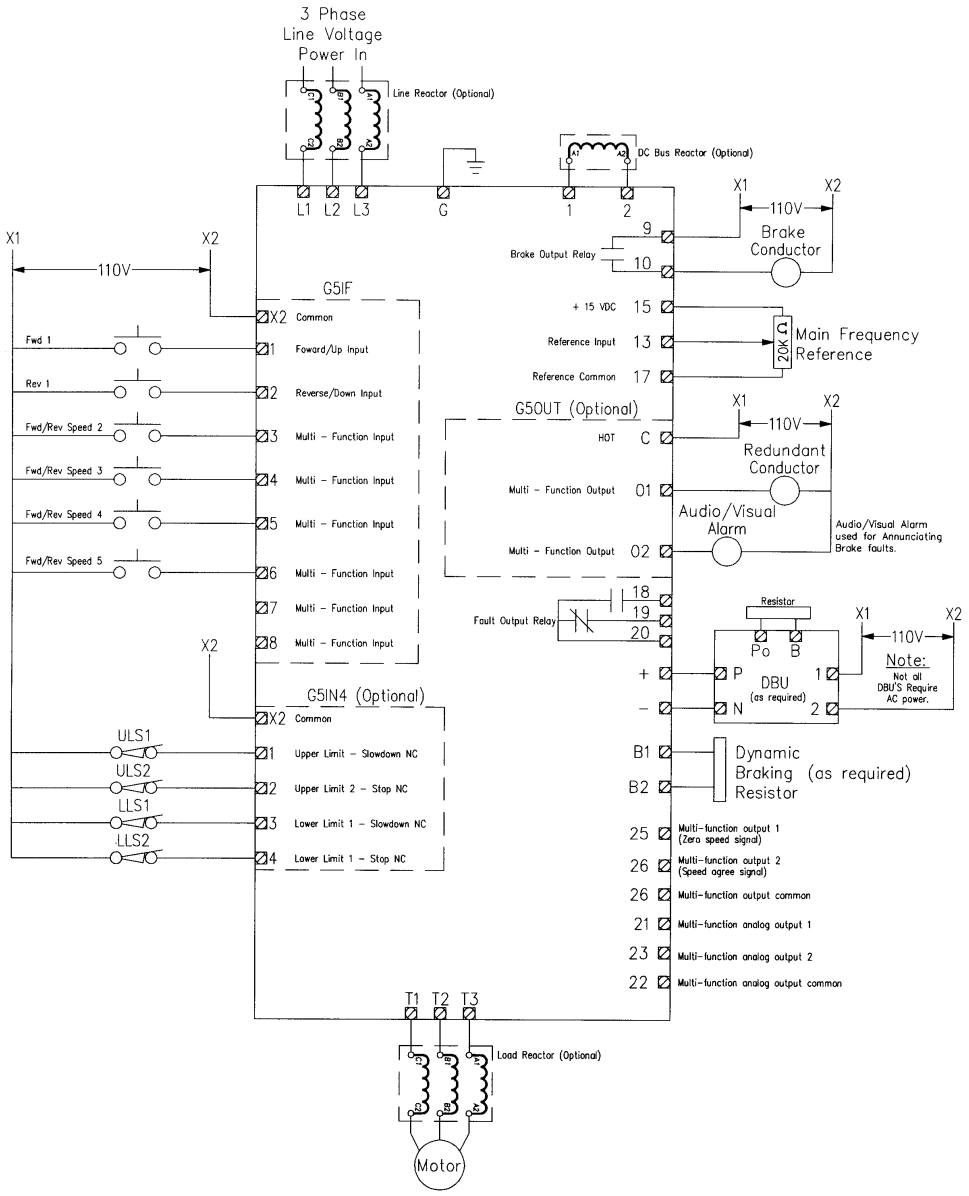

IMPULSE®•VG+ Series 2 Wiring Diagram

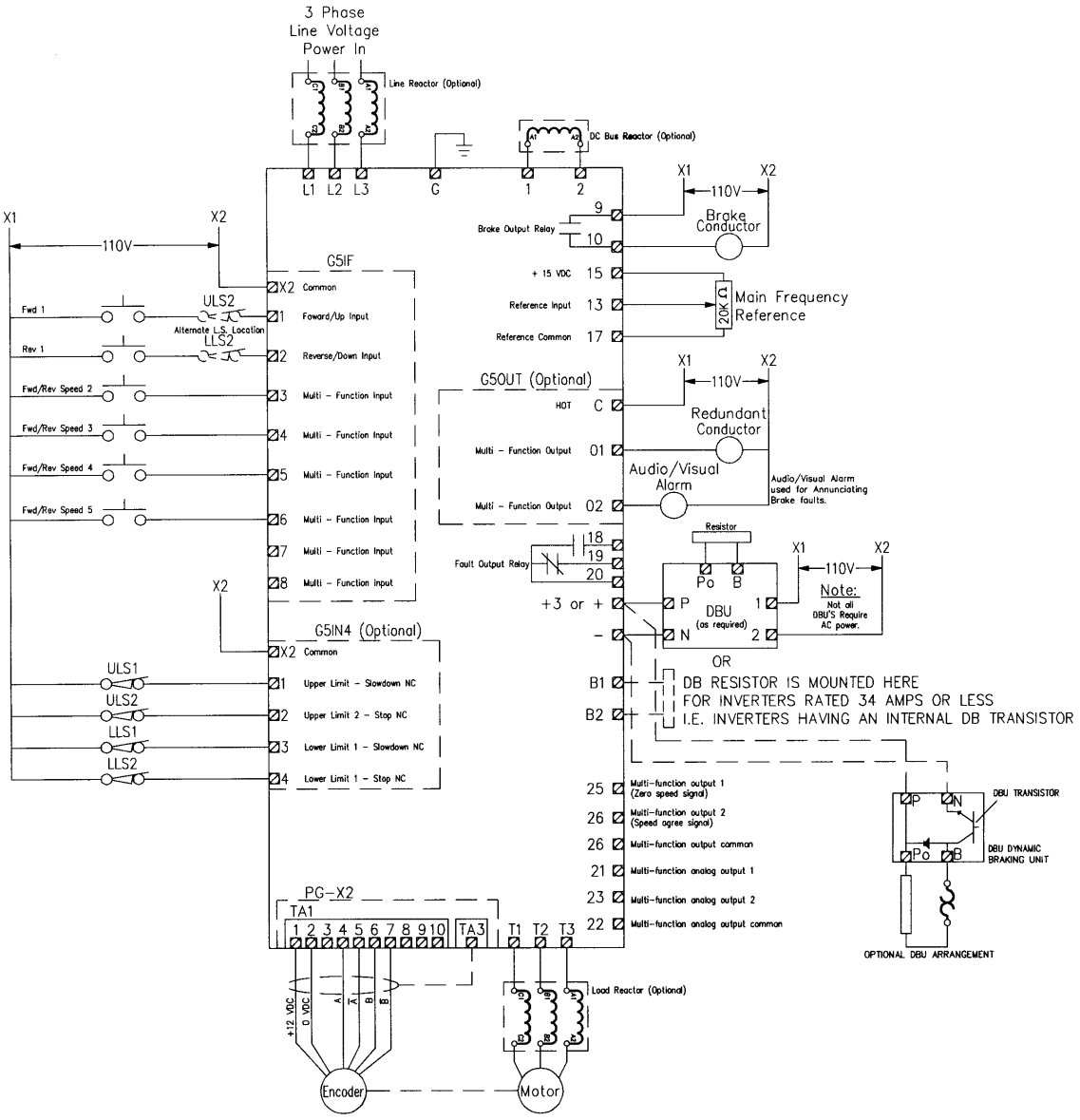

IMPULSE®•G+/VG+ Series 4 Wiring Diagram

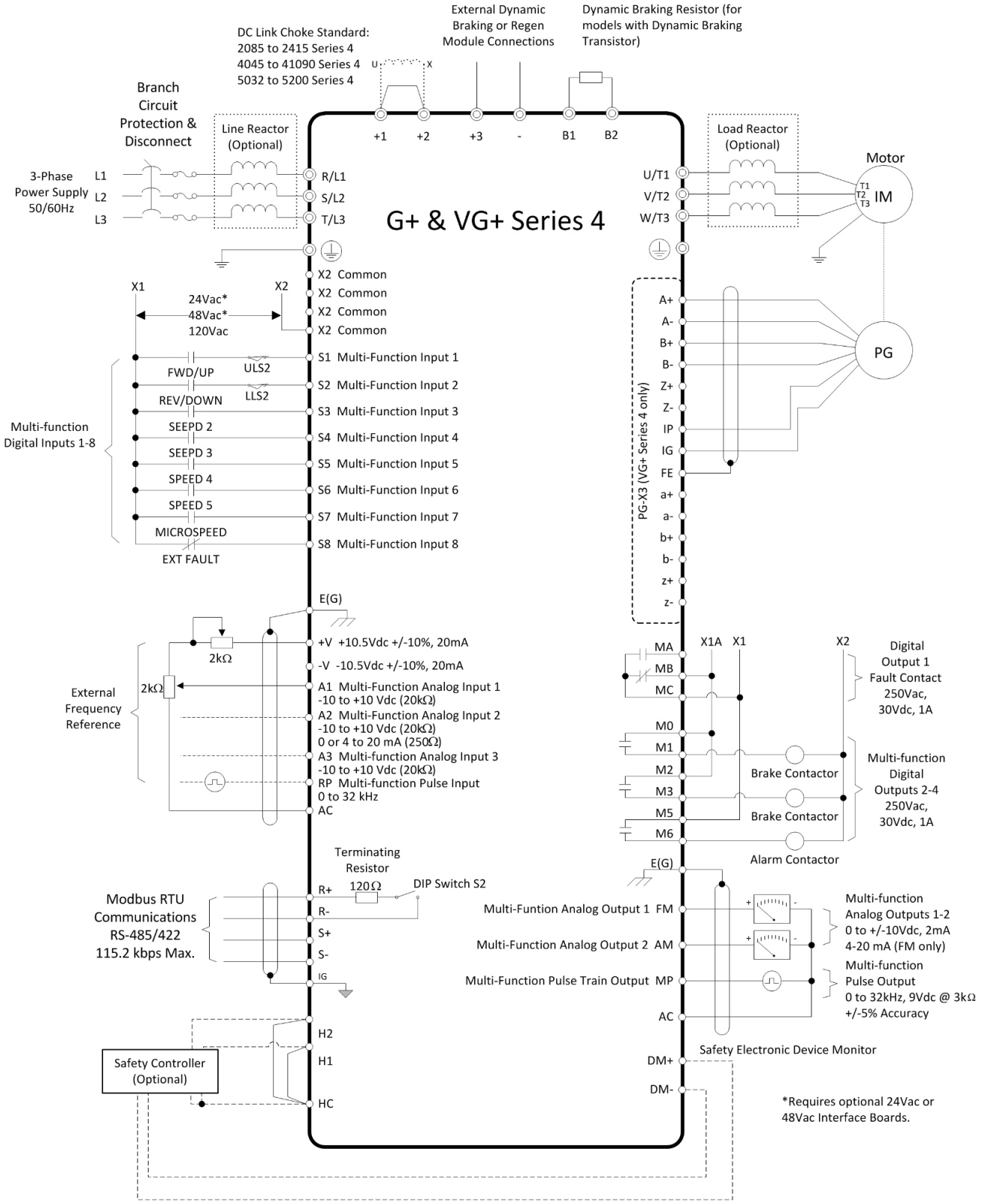

1.8 Parameter Cross Reference

Parameter Name	Series 2		Series 4		Comments	
	No.	Default	No.	Default	Series 2	Series 4
Parameter Access Level	A1-01	2	A1-01	2	0: Operation Only	0: Operation Only
					1: User Parameters	1: User Parameters
					2: Advanced Level	2: Advanced Level
Control Method Selection	A1-02	G+: 0 VG+: 3	A1-02	G+: 0 VG+: 3	3: Flux Vector	0: V/f Control for Induction Motors
						1: V/f Control with PG Speed Feedback
						2: Open Loop Vector Control
						3: Closed Loop Vector Control
Select Motion	A1-03	G+: 0 VG+: 2	A1-03	G+: 1 VG+: 2	0: Traverse	0: Traverse
					--	1: Standard Hoist
					2: No-Load Brake Hoist	2: Hoist NLB
					--	4: Braketronic
Speed Reference	A1-04	6	A1-04	1	0: 5-SPD Multi-step	0: 2-SPD Multi-step
					1: 2-Step infinitely variabl	1: 3-SPD multi-step
					2: 3-Step infinitely variable	2: 5-SPD Multi-step
					3: Uni-polar analog	3: 2-Step infinitely variable
					4: Bi-polar analog	4: 3-Step infinitely variabl
					5: 2-SPD Multi-step	5: Uni-polar analog
					6: 3-SPD multi-step	6: Bi-polar analog
					7: Not Used	7: Digital Opt Card
					--	8: Serial option card
Initial Parameters	A1-05	0	A1-05	0	0: No Initialization	0: No Initialization
					1110: User Initialization	1110: User Initialize
					--	2220: 2-Wire Initialization
					--	5550: OPE04 Reset
					--	9990: EEPROM
Password Entry	A1-06	0000	A1-06	0000		
User Parameters	A2-01 ~ A2-30		A2-01 ~ A2-30			
Reference 1	B1-01	15.00 Hz	B1-01	15.00 Hz	--	
Reference 2	B1-02	30.00 Hz	B1-02	30.00 Hz	--	
Reference 3	B1-03	60.00 Hz	B1-03	60.00 Hz	--	
Reference 4	B1-04	45.00 Hz	B1-04	0.00 Hz	--	
Reference 5	B1-05	60.00 Hz	B1-05	0.00 Hz	--	

Parameter Name	Series 2		Series 4		Comments	
	No.	Default	No.	Default	Series 2	Series 4
Reference 6	B1-06	0.00 Hz	B1-06	0.00 Hz	--	
Reference 7	B1-07	0.00 Hz	B1-07	0.00 Hz	--	
Reference 8	B1-08	0.00 Hz	B1-08	0.00 Hz	--	
Jog Reference	B1-09	6 Hz	B1-17	6.00 Hz	--	
Ref Priority	B1-10	0	B1-18	0	0: Digital Ref Only 1: Analog Ref Only 2; Higher Ref Sel	0: Digital Ref Only 1: Analog Ref Only 2: Higher Ref Sel
Ref Upper Limit	B2-01	100.0%	B2-01	100.0%	--	
Ref Lower Limit	B2-02	2.0%	B2-02	0.0%	--	
Upper Lim Gain	B2-03	100%	B2-04	G+: 2.0% VG+: 0.0%*	*Initial value set by X-Press Programming	
Reference Source	B3-01	1	B3-01	1	0: Operator	0: Operator
					1: Terminals	1: Terminals
					2: Serial Com	2: Communication
					3: Option PCB	3: Option PCB
					--	4: Pulse Input (H6-01)
Run Source	B3-02	1	B3-02	1	0: Operator	0: Operator
					1: Terminals	1: Terminals
					2: Serial Com	2: Communication
					3: Option PCB	3: Option PCB
Stop Method	B3-03	Determined by X-Press Programming	B3-03	G+: 1 VG+: 6	0: Ramp to Stop (A1-03=0)	0: Decel to Stop
					1: Coast to Stop (A1-03=1)	1: Coast to Stop
					4: Ramp with timer (Traverse mode only)	4: Decel with timer (Traverse mode only)
					6: No Load Brake (A1-03=2) (See No-Load Brake Start/Stop)	6: No Load Brake (See No-Load Brake Start/Stop)
Zero-Speed Oper	B3-05	0	B3-05 (VG+ only)	0	0: RUN at Freq Ref	0: RUN at Freq Ref
					1: Stop	1: STOP
					2: RUN at Min. Freq (E1-09)	2: RUN at Min. Freq (E1-09)
					3: RUN at Zero RPM	3: RUN at Zero RPM
# of Input Scans	B3-06	1	B3-06	1	0: 2ms–2 scans	0: 1 scan (1 ms)
					1: 5ms–2 scans	1: 2 scans (2 ms)
LOC/REM Run Sel	B3-07	0	B3-07	0	0: Cycle Extrn Run	0: Cycle Extrn Run
					1: Accep Extrn Run	1: Accep Extrn Run
Trim Control LVL	B4-02	10%	--	--	--	
Accel Time 1	B5-01	5.0 sec	B5-01	5.0 sec	--	
Decel Time 1	B5-02	3.0 sec	B5-02	3.0 sec	--	
Accel Time 2	B5-03	1.0 sec	B5-03	10.0 sec	--	
Decel Time 2	B5-04	1.0 sec	B5-04	10.0 sec	--	

Parameter Name	Series 2		Series 4		Comments	
	No.	Default	No.	Default	Series 2	Series 4
Accel Time N Chg	B5-05	1.0 sec	B5-05	2.0 sec		
Dec Time N Chg	B5-06	1.0 sec	B5-06	2.0 sec		
Hoist 2 Stop	B5-07	0.3	--	--	--	
Fault Stop Time	B5-08	0.3	B5-08	0.5	--	
Acc/Dec Units	B5-09	1	B5-09	1	0: 0.01sec for 0.00–2.55 sec	0: 0.01sec for 0.00–2.55 sec
					1: 0.1sec for 0.0–25.5	1: 0.1sec for 0.0–25.5
Acc/Dec SW Freq	B5-10	120.0 Hz	B5-10	0.0 Hz	--	
SW Freq Compare	B5-11	1	B5-11	1	0: Lower SW Freq	0: Lower SW Freq
					1: Upper SW Freq	1: Upper SW Freq
For T Lim Accel	B5-12	0 sec	C7-05	1.25	--	
For T Lim Decel	B5-13	0 sec	C7-05	1.25	--	
Rev T Lim Accel	B5-14	0.5 sec	C7-06	1.25	--	
Rev T Lim Decel	B5-15	0 sec	C7-06	1.25	--	
Ph Loss In Sel	B6-01	0	L8-05	1	0: Disabled	0: Disabled
					1: Enabled	1: Enabled
Ph Loss In Lvl	B6-02	7.5%	--	--	--	
Ph Loss Out Sel	B6-03	1	L8-07	1	0: Disabled	0: Disabled
					1: Enabled	1: 1PH Loss Det
					--	2: 2/3PH Loss Det
Ph Loss Out Lvl	B6-04	5.0%	--	--	--	
SVR Delay Timer	B7-01	70 ms	--	--	--	
Jump Freq 1	B8-01	0.0 Hz	B8-01	0.0 Hz	--	
Jump Freq 2	B8-02	0.0 Hz	B8-02	0.0 Hz	--	
Jump Freq 3	B8-03	0.0 Hz	B8-03	0.0 Hz	--	
Jump Bandwidth	B8-04	1.0 Hz	B8-04	1.0 Hz	--	
Quick Stop 0/1	C1-01	0	C1-01	G+: 0 VG+: 1	0: Disabled	0: Disabled
					1: Enabled	1: Enabled
Quick Stop Time	C1-02	1.0 sec	C1-02	1.0 sec	--	
Reverse Plug 0/1	C1-03	0	C1-03	0	0: Disabled	0: Disabled
					1: Enabled	1: Enabled
PlgRev Dec Time	C1-04	1.0 sec	C1-04	2.0 sec	--	
PlgRev Acc Time	C1-05	1.0 sec	C1-05	2.0 sec	--	
MS Gain 1	C2-01	1.00	C2-01	1.00	--	
MS Gain 2	C2-02	1.00	C2-02	1.00	--	
Up Limit 1 Speed	C3-01	6 Hz	C3-01	6.00 Hz	--	
UL 1 Decel Time	C3-02	1.0 sec	C3-02	1.0 sec	--	
UL 2 Stop Time	C3-03	1.0 sec	C3-03	1.0 sec	--	
Low Limit 1 Speed	C3-04	6 Hz	C3-04	6.00 Hz	--	
LL 1 Decel Time	C3-05	1.0 sec	C3-05	1.0 sec	--	
LL 2 Stop Time	C3-06	1.0 sec	C3-06	1.0 sec	--	
Upper Action	C3-07	0	C3-07	2	0: Decel to Stop	0: Decel to Stop
					1: BB to Stop	1: Coast to Stop
					--	2: Use B3-03 Method

Parameter Name	Series 2		Series 4		Comments	
	No.	Default	No.	Default	Series 2	Series 4
Zero Servo Timer	C4-01	10 sec	C4-01 (VG+ only)	10 sec	--	
Zero Servo Gain	C4-02	Drive Dependent	C4-02 (VG+ only)	5	--	
Zero Servo Count	C4-03	10	C4-03 (VG+ only)	10	--	
Load Check 0/1	C5-01	0	C5-01	0	0: Decel to Stop	0: Disabled
					1: BB to Stop	1: Auto - I/T
					--	2: Auto - Analog
LC Alarm Action	C5-02	1	C5-02	4	0: Alarm Only	0: Alarm Only
					1: Decel to Stop	1: Decel to Stop
					2: Coast to Stop	2: Coast to Stop
					3: Fault Stop	3: Fault Stop
					--	4: Use B3-03 Method (allows Lower only) (alarm)
Min Torque Ref	C5-03	60%	C5-03	60%	--	
Look Speed I	C5-04	6 Hz	--	--	--	
Vec Torque Ref	C5-06	125%	--	--	--	
Look Speed 2	C5-07	20 Hz	--	--	--	
Look Speed 3	C5-09	60 Hz	--	--	--	
I Ref for > LS 3	C5-11	160%	--	--	--	
LC Setting Time	C5-12	0.20 sec	--	--	--	
LC Test Time	C5-13	0.10 sec	C5-13	0.25 Hz	--	
LC Fault Speed	C5-14	6 Hz	C5-14	6 Hz	--	
Ultra Lift 0/1	C6-01	0	C6-01	0	0: Disabled	0: Disabled
					1: Enabled Automatic	1: Enabled Auto
					2: Enabled by MFI	2: Enabled by MFDI
					--	3: Enabled Adaptive
					--	4: Adaptive by MFDI
Ultra Lift ForSpd	C6-02	60 Hz	C6-02	60 Hz	--	
Ultra Lift RevSpd	C6-03	60 Hz	C6-03	60 Hz	--	
Ultra Lift For T	C6-04	50%	C6-04	50%	--	
Ultra Lift Rev T	C6-05	30%	C6-05	30%	--	
UL Enabling Spd	C6-06	60 Hz	C6-06	59 Hz	--	
UL Delay Time	C6-07	2.0 sec	C6-07	2.0 sec	--	
SFS Acc Gain	C6-08	1.0	C6-08	1.0	--	
Torque Limit Fwd	C7-01	150%	C7-01	150%	--	
Torque Limit Rev	C7-02	150%	C7-02	150%	--	
Torq Lmt Rgn	C7-03	180%	C7-03	180%	--	
Torq Limit Rev Rgn	C7-04	180%	C7-04	180%	--	
T-Lim Gain MFI	C7-07	1.25	--	--	--	

Parameter Name	Series 2		Series 4		Comments	
	No.	Default	No.	Default	Series 2	Series 4
Torq Comp Time	C8-01	Determined by Drive	C8-01 (VG+ only)	1.0/1.5 sec	--	
IFB OK Timer	C8-02	Determined by Drive	C8-02 (VG+ only)	1.0/1.5 sec	--	
Brake Rel Torq	C8-03	10%	C8-03 (VG+ only)	10%	--	
Roll Back Timer	C8-04	0.7 sec	C8-04 (VG+ only)	0.3 sec	--	
Roll Back Count	C8-05	400 pulses	C8-05 (VG+ only)	800 pulses	--	
BE3/Alt Torq T	C8-06	0.50 sec	C8-06 (VG+ only)	0.30 sec	--	
BE3 Det Count	C8-07	50 pulses	C8-07 (VG+ only)	10 pulses	--	
Alt Rev T Limit	C8-08	10%	C8-08 (VG+ only)	25%	--	
Zero Speed Level	C8-09	1 Hz	C8-09 (VG+ only)	1 Hz	--	
Load Float Time	C8-10	10 sec	C8-10 (VG+ only)	10 sec	--	
Brake Delay Time	C8-11	0.7 sec	C8-11 (VG+ only)	0.7 sec	--	
BE6 Detect Timer	C8-12	5.0 sec	C8-12 (VG+ only)	5.0 sec	--	
BE6 Max Count	C8-13	250 pulses	C8-13 (VG+ only)	250 pulses	--	
Load Float Ext. T	C8-15	10 sec	C8-15 (VG+ only)	10 sec		
Init Brk Release	C8-16	100%	--	--	--	
BE6 Up Speed	C8-17	6.00 Hz	C8-18 (VG+ only)	6.00 Hz	--	
Load Float PG Moni	C8-18	0	--	--	0: Disabled 1: Enabled	--
PG Moni Count	C8-19	20	--	--	--	
Shaft Osc. Gain	C8-20	15	--	--	--	
PG Moni Flt Time	C8-21	1.00	--	--	--	
G5IN4 0/1	C9-01	0	C9-01	0	0: Disabled 1: Enabled --	0: Disabled 1: Enabled 2: Serial
G5IN4 Setup	C9-02	0	C9-02	0F	--	
Load Weight 0/1	C10-01	0	C10-01	0	0: Disabled 1: Enabled at C5-04 (Automatic for the duration of C5-12 + C5-13) 2: Enabled at MFI 3: Both Auto & MFI	0: Disabled 1: Enabled (FVC Only) 2: Enabled Analog --
TRQ Pri Delay	C10-02	200ms	--	--	--	
LW Display Hold	C10-03	0	C10-03	0	0: Hold Display 1: Hold Disp 3 sec	0: Hold Display 1: Hold Disp 3 sec

Parameter Name	Series 2		Series 4		Comments	
	No.	Default	No.	Default	Series 2	Series 4
LW Conversion	C10-04	0	C10-04 (VG+ only)	00000	--	
Full Load TRQ	C10-05	100.0%	C10-09 (VG+ only)	100.0%	--	
No Load TRQ	C10-06	0.0%	C10-10 (VG+ only)	20.0%	--	
Line 2 Display	C10-07	0	C10-06 (VG+ only)	0	0: tons	0: Tons
					1: pounds	1: Pounds
					2: kilograms	2: Kilograms
					3: metric tons	3: Metric Tons
					4: percent load	4: Percent Load
Slack Cable 0/1	C11-01	0	C11-01 (VG+ only)	0	0: Disabled	0: Disabled
					1: Enabled	1: Enabled
Action at SLC	C11-02	2	C11-02 (VG+ only)	2	0: No Action	0: No Action
					1: No Act/C3-04	1: No Act/C3-04
					2: Decel/C3-04	2: Decel/C3-04
					3: Decel/No Opr	3: Decel/No Opr
					4: Dec Stop/C3-04	4: Dec Stop/C3-04
					5: Dec Stop/No Opr	5: Dec Stop/No Opr
SLC Detect Torq	C11-03	30%	C11-03 (VG+ only)	30%	--	
SLC Detect Spd 1	C11-04	2 Hz	C11-04 (VG+ only)	2 Hz	--	
SLC Delay Time 1	C11-05	0.50 sec	C11-05 (VG+ only)	0.50 sec	--	
SLC Detect Spd 2	C11-06	60 Hz	C11-06 (VG+ only)	60 Hz	--	
SLC Delay Time 2	C11-07	0.10 sec	C11-07 (VG+ only)	0.10 sec	--	
Brake Jog Delay	C12-01	0.0 sec	C12-01	0.0 sec	--	
Brake Run Delay	C12-02	0.0 sec	C12-02	0.0 sec	--	
Timer function ON-Delay Timer	C12-03	0.0	C12-03	0.0 sec	--	
Timer function OFF-Delay Time	C12-04	0.0	C12-04	0.0 sec	--	
Inch Run Time	C13-01	1.00 sec	C13-01	1.00 sec	--	
Repeat Delay T	C13-02	1.00 sec	C13-02	1.00 sec	--	
DCInj Start Freq	D1-01	1.5 Hz	D1-01	0.5 Hz	--	
DCInj@Start	D1-03	0.00 sec	D1-03	0.00 sec	--	
DCInj Time@Stop	D1-04	0.05 sec	D1-04	0.05 sec	--	
DC Injection P Gain	D1-05	0.05	--	--	--	
DC Injection Integral Time	D1-06	100	--	--	--	
DC Injection Limit	D1-07	15.0	--	--	--	
Slip Comp Gain	D2-01	1	D2-01	1.0	--	
ASR P Gain 1	D4-01	30	D4-01 (VG+ only)	30.00	--	

Parameter Name	Series 2		Series 4		Comments	
	No.	Default	No.	Default	Series 2	Series 4
ASR 1 Time 1	D4-02	0.500 sec	D4-02 (VG+ only)	0.500 sec	--	
ASR P Gain 2	D4-03	30	D4-03 (VG+ only)	A1-02	--	
ASR 1 Time 2	D4-04	0.100 sec	D4-04 (VG+ only)	A1-02	--	
ASR Delay Time	D4-06	0.004 sec	D4-06 (VG+ only)	A1-02	--	
ASR Gain SW Freq	D4-07	0.0 Hz	D4-07 (VG+ only)	0.0 Hz	--	
ASR 1 Limit	D4-08	400%	D4-08 (VG+ only)	400%	--	
Torque Control	D5-01	0	D5-01 (VG+ only)	0	0: Speed Control	0: Speed Control
					1: Torque Control	1: Torque Control
Torque Ref Filter	D5-02	0 ms	D5-02 (VG+ only)	0 ms	--	
Speed Limit Sel	D5-03	1	D5-03 (VG+ only)	1	1: Analog Input	1: Fref Limit
					2: Program Setting	2: Speed Limit Sel
Speed Lmt Value	D5-04	0%	D5-04 (VG+ only)	0%	--	
Speed Lmt Bias	D5-05	10%	D5-05 (VG+ only)	105%	--	
Ref Hold Time	D5-06	0 ms	D5-06 (VG+ only)	0 ms	--	
Droop Quantity	D6-01	0	--	--	--	
Droop Delay Time	D6-02	0.05 sec	--	--	--	
Dwell Ref @ Start	D8-01	0 Hz	D8-01	0 Hz	--	
Dwell Time @ Start	D8-02	0 sec	D8-02	0 sec	--	
Dwell Ref @ Stop	D8-03	0 Hz	D8-03	0 Hz	--	
Dwell Time @ Stop	D8-04	0 sec	D8-04	0 sec	--	
S-Crv Acc @ Start	D9-01	*	D9-01	0.20 sec*	Determined by X-Press Programming	
S-Crv Acc @ End	D9-02	*	D9-02	0.20 sec*	Determined by X-Press Programming	
S-Crv Dec @ Start	D9-03	*	D9-03	0.20 sec*	Determined by X-Press Programming	
S-Crv Dec @ End	D9-04	0	D9-04	0.00 sec	--	
Carrier Frequency Max	D10-01	3	D10-03	2.0 kHz	0: 0.4 kHz	1.0–15.0 kHz
					1: 1.0 kHz	--
					2: 1.5 kHz	--
					3: 2.0 kHz	--
					4: 2.5 kHz	--
					5: 5.0 kHz	--
					6: 10.0 kHz	--
Carrier in tune	D12-30	0	--	--	0: 2kHz	--
					1: Adjustable by D10-01 (Fc Upper Limit)	--

Parameter Name	Series 2		Series 4		Comments	
	No.	Default	No.	Default	Series 2	Series 4
Input Voltage	E1-01	*	E1-01	*	* Initial value determined by O2-04 (kVa selection)	
Motor Selection	E1-02	1	--	--	0: Stf Fan Cooled	--
					1: Std Blower Cooled	--
V/f Selection	E1-03	F	E1-03 (G+ only)	Determined by X-Press Programming	--	0: 60 Hz, Level 0
					--	1: 60 Hz, Level 1
					--	2: 60 Hz, Level 2
					--	3: 60 Hz, Level 3
					--	4: 60 Hz, Level 4
					--	5: 60 Hz, Level 5
					--	6: 60 Hz, Level 6
					--	7: 60 Hz, Level 7
					--	8: 60 Hz, Level 8
					--	9: 72 Hz, Level 0
					--	A: 72 Hz, Level 1
					--	B: 72 Hz, Level 2
					--	C: 90 Hz, Level 0
					--	D: 90 Hz, Level 1
					--	E: 90 Hz, Level 2
					--	F: Custom V/f, E1-04 through E1-13 settings define the V/f pattern, (Default for A1-03 = 2 (NLB)). When A1-03 = 0, 1, 3, or 4 and E1-03 is changed to 0F, the values for E1-04 through E1-13 are the same as E1-03 = 4. See V/f tables for appropriate voltage
					--	FF: Custom with no limitations on E1-XX.
Max Frequency	E1-04	60.0 Hz	E1-04	60.0 Hz	--	
Max Voltage	E1-05	460 V	E1-05	O2-04	--	
Base Frequency	E1-06	60 Hz	E1-06	E1-03	--	
Min Frequency	E1-09	0.0 Hz	E1-09	0.0 Hz (VG+) 1.5 Hz (G+)	--	
Mid Frequency B	E1-11	0.0 Hz	E1-11	0.0 Hz	--	
Mid Voltage B	E1-12	0.0 V	E1-12	0.0 VAC	--	
Base Voltage	E1-13	0.0 V	E1-13	0.0 VAC	--	
Motor Rated FLA	E2-01	*	E2-01	*	* Initial value is determined by O2-04 (kVA Selection)	
Motor Rated Slip	E2-02	*	E2-02	*	* Initial value is determined by O2-04 (kVA Selection)	

Parameter Name	Series 2		Series 4		Comments	
	No.	Default	No.	Default	Series 2	Series 4
No-Load Current	E2-03	*	E2-03	*	* Initial value is determined by O2-04 (kVA Selection)	
Number of Poles	E2-04	4	E2-04	4	--	
Term Resistance	E2-05	*	E2-05	*	* Initial value is determined by O2-04 (kVA Selection)	
Leak Inductance	E2-06	*	E2-06	*	* Initial value is determined by O2-04 (kVA Selection)	
Saturation Comp 1	E2-07	*	E2-07	*	* Initial value is determined by O2-04 (kVA Selection)	
Saturation Comp 2	E2-08	*	E2-08	*	* Initial value is determined by O2-04 (kVA Selection)	
Mechanical Loss	E2-09	*	E2-09	0.0%	* Initial value is determined by O2-04 (kVA Selection)	
Control Method	E3-01	2	E3-01	0	0: V/f control	0: V/f control
					2: Open loop vector	--
Motion 2	E3-02	1	--	--	0: Traverse	--
					1: Standard Hoist	--
V/f 2 Max freq	E4-01	60.0 Hz	--	--	--	
V/f 2 Max voltage	E4-02	230.0 V	--	--	--	
V/f 2 Base Freq	E4-03	60.0 Hz	--	--	--	
V/f 2 Mid Freq	E4-04	3.0 Hz	--	--	--	
V/f 2 Mid Voltage	E4-05	12.6 V	--	--	--	
V/f 2 Min Freq	E4-06	0.5 Hz	--	--	--	
V/f 2 Min Voltage	E4-07	2.3 V	--	--	--	
Motor2 Rated FLA	E5-01	*	--	--	*Based on inverter model	
Motor2 Slip Freq	E5-02	*	--	--	*Based on inverter model	
Motor2 No Load 1	E5-03	*	--	--	*Based on inverter model	
Motor2 Term Ohms	E5-05	*	--	--	*Based on inverter model	
Motor2 Leak	E5-06	*	--	--	*Based on inverter model	
PG Pulses/Rev	F1-01	1024 PPR	F1-01 (VG+ only)	1024 PPR	--	
PG Fdbk Loss Sel	F1-02	1	F1-21 (VG+ only)	1	0: Ramp to Stop	0: Decel to Stop
					1: Coast to Stop	1: Coast to Stop
					2: Fast-Stop	2: Fast Stop
					3: Alarm Only	3: Alarm Only
PG Overspeed Sel	F1-03	1	F1-23 (VG+ only)	1	0: Ramp to Stop	0: Decel to Stop
					1: Coast to Stop	1: Coast to Stop
					2: Fast-Stop*	2: Fast Stop
					3: Alarm Only	3: Alarm Only

Parameter Name	Series 2		Series 4		Comments	
	No.	Default	No.	Default	Series 2	Series 4
PG Deviation Sel	F1-04	1	F1-26 (VG+ only)	5	0: Ramp to Stop	0: @Spd Agree-Decel
					1: Coast to Stop	1: @Spd Agree-Coast
					2: Fast-Stop*	2: @SpdAgree-F-Stop
					3: Alarm Only	3: @Spd Agree-Alm
					--	4: @Run-Decel
					--	5: @Run-Coast
					--	6: @Run-Fast Stop
					--	7: @Run-Alarm Only
PG Rotation Sel	F1-05	0	F1-02 (VG+ only)	0	0: Fwd = C.C.W.	0: FWD = C.C.W. - (B-phase at motor REV. run)
					1: Fwd = C.W.	1: FWD = C.W. - (A-phase at motor REV. run)
PG Output Ratio	F1-06	1	F1-03 (VG+ only)	1	--	
PG Ramp PI/I Sel	F1-07	0	--	--	0: Disabled	--
					1: Enabled	
PG Overspd Level	F1-08	115%	F1-24	115%	--	--
PG Overspd Time	F1-09	0.0 sec	F1-25	0.0 sec	--	
PG Deviate Level	F1-10	10%	F1-27	10%	--	
PG Deviate Time	F1-11	0.3 sec	F1-28	0.3 sec	--	
SFS Deviate	F1-12	120.0 Hz	--	--	--	
PG # Gear Teeth1	F1-13	0	F1-04	0	--	
PG# Gear Teeth2	F1-14	0	F1-05	0	--	
PGO Detect Time	F1-15	0.5	--	--	--	
Pulse PPR	F1-16	1 PPR	--	--	--	
Pulse Enable Spd	F1-17	10.0	--	--	--	
MFI Fault Buffer	F1-18	3	--	--	--	
AI-14 Input Sel	F2-01	0	F2-01	0	0: 3ch Individual	0: 3ch Individual
					1: 3ch Additional	1: 3ch Additional
DI Option Setup	F3-01	0	--	--	0: BCD 1%	--
					1: BCD 0.1%	
					2: BCD 0.01%	
					3: BCD 1 Hz	
					4: BCD 0.1 Hz	
					5: BCD 0.01 Hz	
					6: BCD (5DG) 0.01 Hz	
					7: Binary	

Parameter Name	Series 2		Series 4		Comments	
	No.	Default	No.	Default	Series 2	Series 4
AO Ch1 Select	F4-01	2	F4-01	102	Range: 1 through 35 (See instruction manual for complete list)	Range: 000 through 999 (See instruction manual for complete list)
AO Ch1 Gain	F4-02	1.00	F4-02	100%	--	
AO Ch2 Select	F4-03	3	F4-03	103	--	
AO Ch2 Gain	F4-04	0.50	F4-04	50%	--	
DO-02 Ch1 Select	F5-01	0	F5-01	0	--	
DO-02 Ch2 Select	F5-02	1	F5-02	1	--	
DO-08 Selection	F6-01	0	F5-09	0	0: 8ch Individual 1: Binary Output 2: Srl Com Output	0: 8 Ch Individual 1: Binary Output 2: Output per F5-01 ~ 08
PO-36F Selection	F7-01	1	--	--	0: 1 X Output Freq 1: 6 X Output Freq 2: 10 X Output Freq 3: 12 X Output Freq 4: 36 X Output Freq	--
EFO Selection	F9-01	0	--	--	0: Normally Open 1: Normally Closed	--
EFO Detection	F9-02	0	--	--	0: Always Detected 1: Only During Run	--
EFO Action	F9-03	1	--	--	0: Ramp to Stop 1: Coast to Stop 2: Fast Stop 3: Alarm Only	--
Trace Sample Time	F9-04	0	--	--	--	
Torq Ref/Lmt Sel	F9-05	0	F6-06	0	0: Disabled 1: Enabled	0: Disabled 1: Enabled
BUS Fault Sel	F9-06	1	--	--	0: Ramp to Stop 1: Coast to Stop 2: Fast Stop 3: Alarm Only	--
Terminal 3 Sel	H1-01	0	H1-03	Determined by X-Press Programming	Selects the multi-function inputs (see H1-06)	Selects the multi-function inputs (see H1-08)
Terminal 4 Sel	H1-02	1	H1-04	Determined by X-Press Programming	Same as H1-01	Same as H1-03
Terminal 5 Sel	H1-03	7	H1-05	Determined by X-Press Programming	Same as H1-01	Same as H1-03

Parameter Name	Series 2		Series 4		Comments	
	No.	Default	No.	Default	Series 2	Series 4
Terminal 6 Sel	H1-04	9	H1-06	Determined by X-Press Programming	Same as H1-01	Same as H1-03
Terminal 7 Sel	H1-05	24	H1-07	Determined by X-Press Programming	Same as H1-01	Same as H1-03
Terminal 8 Sel	H1-06	E	H1-08	Determined by X-Press Programming	Range: 0 through 4F (See Instruction Manual for complete list)	Range: 0 through 81 (See Instruction Manual for complete list)
Terminal 9 Sel (Series 2) Term M1-M2 Sel (Series 4)	H2-01	0	H2-01	0	Assigns one of the following 48 multi-function digital output parameters to Terminal 9, 25, or 26.	Digital Output 1 Function
Terminal 25 Sel (Series 2) Term M3-M4 Sel (Series 4)	H2-02	0	H2-02	Determined by X-Press Programming	Terminal 1 on the G5OUT Option Card	Same as H2-01
Terminal 26 Sel (Series 2) Termn M5-M6 Sel (Series 4)	H2-03	7F	H2-03	Determined by X-Press Programming	Range: 0 through 40 (See Instruction Manual for complete list)	Range: 0 through 148 (See Instruction Manual for complete list)
Term 13 Signal (Series 2) Terminal A1 (Series 4)	H3-01	0	H3-01	0	0: 0 VDC to 10 VDC	0: 0VDC to 10V
					1: -10 VDC to +10 VDC	1: -10V to +10V
Terminal 13 Gain	H3-02	100%	H3-03	100.0%	--	
Terminal 13 Bias	H3-03	0%	H3-04	0.0%	--	
Term 16 Signal (Series 2) Terminal A3 (Series 4)	H3-04	0	H3-05	0	0: 0 VDC to 10 VDC	0: 0 VDC to 10V
					1: -10 VDC to +10 VDC	1: -10V to +10V
Terminal 16 Sel	H3-05	0	H3-06	1F	Range: 0 through 1F (See instruction manual for complete list)	Range: 0 through 31 (See instruction manual for complete list)
Terminal 16 Gain	H3-06	100.0%	H3-07	100.0%	--	
Terminal 16 Bias	H3-07	0.0%	H3-08	0.0%	--	
Term 14 Signal (Series 2) Terminal A2 Signal (Series 4)	H3-08	2	H3-09	2	0: 0 to +10 VDC *(Call Electromotive Systems first to modify control board).	0: 0 to +10V
					1: -10 to +10 VDC *(Call Electromotive Systems first to modify control board).	1: -10 to +10V
					2: 4 to 20mA	2: 4 to 20mA
					--	3: 0 to 20mA

Parameter Name	Series 2		Series 4		Comments	
	No.	Default	No.	Default	Series 2	Series 4
Terminal 14 Sel	H3-09	1F	H3-10	0	Range: 0 through 1F (See instruction manual for complete list)	Range: 0 through 31 (See instruction manual for complete list)
Terminal 14 Gain	H3-10	100.0%	H3-11	100.0%	--	
Terminal 14 Bias	H3-11	0.0%	H3-12	0.0%	--	
Filter Avg Time	H3-12	0.00 sec	H3-13	0.03 sec	--	
Terminal 21 Sel (Series 2) Terminal FM (Series 4)	H4-01	2	H4-01	102	Range: 1 through 35 (See Instruction Manual for complete list)	Range: 0 through 999 (See Instruction Manual for complete list)
Terminal 21 Gain	H4-02	1.00	H4-02	100.0%	--	
Terminal 21 Bias	H4-03	0.0	H4-03	0.0%	--	
Terminal 23 Sel (Series 2) Terminal AM (Series 4)	H4-04	3	H4-04	103	--	
Terminal 23 Gain	H4-05	1.00	H4-05	50.0%		
Terminal 23 Bias	H4-06	0.0%	H4-06	0.0%		
AO Level Select	H4-07	0	--	--	0: 0 to +10 VDC 1: -10 to +10 VDC	--
Serial Com Adr	H5-01	1F	H5-01	1F	--	
Serial Baud Rate	H5-02	3	H5-02	3	0: 1200 Baud 1: 2400 Baud 2: 4800 Baud 3: 9600 Baud	0: 1200 Baud 1: 2400 Baud 2: 4800 Baud 3: 9600 Baud 4: 19200 Baud 5: 38400 Baud 6: 57600 Baud 7: 76800 Baud 8: 115200 Baud
Serial Com Sel	H5-03	0	H5-03	0	0: No parity 1: Even parity 2: Odd parity	0: No parity 1: Even parity 2: Odd parity
Serial Fault Set	H5-04	1	H5-04	0	0: Ramp to Stop 1: Coast to Stop 2: Fast-Stop 3: Alarm Only	0: Ramp to Stop 1: Coast to Stop 2: Fast-Stop 3: Alarm Only
Serial Flt Dtct	H5-05	1	H5-05	1	0: Disabled 1: Enabled	0: Disabled 1: Enabled
MOL Fault Select	L1-01	1	L1-01	3	0: Disabled 1: Coast to Stop -- --	0: OL1 Disabled 1: VT Motor 2: CT Motor 3: Vector motor
MOL Time Const	L1-02	1.0 min	L1-02	1.0 min	--	
StallP Decel Sel	L3-04	0	--	--	0: Disabled 1: General Purpose	--

Parameter Name	Series 2		Series 4		Comments	
	No.	Default	No.	Default	Series 2	Series 4
Spd Agree Level	L4-01	0.0 Hz	L4-01	0.0 Hz	--	
Spd Agree Width	L4-02	2.0 Hz	L4-02	2.0 Hz	--	
Speed Agree Lvl ±	L4-03	0.0 Hz	L4-03	0.0 Hz	--	
Speed Agree Width ±	L4-04	2.0 Hz	L4-04	2.0 Hz	--	
Ref Loss Sel	L4-05	0	L4-05	0	0: Stop	0: Stop
					1: Run @ 80% Prev Ref	1: Run@L4-06PrevRef
Torque Det 1 Sel	L6-01	0		0	0: Disable	0: Disabled
					1: At Speed Agree–Alarm	1: OT @ SpdAgree-Alm
					2: At Run–Alarm	2: OT At RUN - Alm
					3: At Speed Agree–Fault	3: OT @ SpdAgree-Flt
					4: At Run–Fault	4: OT At RUN - Flt
					--	5: UT @ SpdAgree-Alm
					--	6: UT At RUN - Alm
					--	7: UT @ SpdAgree-Flt
					--	8: UT At RUN - Flt
Torq Det 1 Lvl	L6-02	150%	L6-02	150%	--	
Torq Det 1 Time	L6-03	0.1 sec	L6-03	0.1 sec	--	
Torq Det 2 Sel	L6-04	0			0: Disable	0: Disabled
					1: At Speed Agree–Alarm	1: OT @ SpdAgree-Alm
					2: At Run–Alarm	2 : OT At RUN - Alm
					3: At Speed Agree–Fault	3: OT @ SpdAgree-Flt
					4: At Run–Fault	4: OT At RUN - Flt
					--	5: UT @ SpdAgree-Alm
					--	6: UT At RUN - Alm
					--	7: UT @ SpdAgree-Flt
					--	8: UT At RUN - Flt
Torq Det 2 Lvl	L6-05	150%	L6-05	150%	--	
Torq Det 2 Time	L6-06	0.1 sec	L6-06	0.1 sec	--	
OH Pre-Alarm Lvl	L8-02	95˚C	L8-02	*	* Initial value is dependent on drive size, which is determined by O2-04 (kVA selection)	

Parameter Name	Series 2		Series 4		Comments	
	No.	Default	No.	Default	Series 2	Series 4
OH Pre-Alarm Sel	L8-03	3	L8-03	3	0: Ramp to Stop	0: Decel to Stop
					1: Coast to Stop	1: Coast to Stop
					2: Fast-Stop	2: Fast-Stop
					3: Alarm Only	3: Use B3-03 Method
					--	4: Alarm Only
					--	5: Run@L8-19 Rate
Ground Fault Detect	L8-10	1	L8-09	1	0: Disabled	0: Disabled
					1: Enabled	1: Enabled
UV3 Detect	L8-14	0	--	--	0: Disabled	--
					1: Enabled	
Reset Select	L9-01	1	L9-01	1	0: Disabled	0: Disabled
					1: Enabled	1: Enabled
Reset Attempts	L9-02	3	L9-02	3	--	
Reset Time	L9-03	0.5 sec	--	--	--	
Reset Flt Sel 1	L9-04	0001	L9-04	0001	--	
Reset Flt Sel 2	L9-05	0080	L9-05	F000	--	
User Monitor Sel	O1-01	6	O1-01	106	Range: 4 through 35 (See Instruction Manual for complete list)	Range: 104 through 813 (See Instruction Manual for complete list)
Power-On Monitor	O1-02	2	O1-02	3	1: Frequency Ref	1: Frequency Ref
					2: Output Freq	2: FWD/REV
					3: Output Current	3: Output Freq
					4: User Monitor	4: Output Current
					--	5: User Monitor
Display Scaling	O1-03	0	O1-03	Determined by A1-02	0–39999	0: 0.01 Hz
						1: 0.01%
						2: RPM
						3: User Units
Display Units	O1-04	0	O1-04	Determined by A1-02	0: Hertz	0: Hertz
					1: RPM	1: RPM
Address Display	O1-05	0	--	--	0: Parameter Number	--
					1: MEMOBUS Address	--
Mode/Service	O2-01	0	O2-01	0	0: Mode/Service	0: Mode/Service
					1: Remote/Local	1: Local/Remote
Oper Stop Key	O2-02	0	O2-02	0	0: BB, Brake Set	0: Coast to Stop
					1: Decel tim1 Stop	1: Decel to Stop
					2: Decel tim2 Stop	2: Use B3-03 Method
					3: Decel Fault Stop	--
User Defaults	O2-03	0	O2-03	0	0: No Change	0: No Change
					1: Set Defaults	1: Set Defaults
					2: Clear all	2: Clear all

Parameter Name	Series 2		Series 4		Comments	
	No.	Default	No.	Default	Series 2	Series 4
KVA Selection	O2-04	Default determined by kVa rating	O2-04	Default determined by drive capacity	Range: 0 through 52 (See Instruction Manual for complete list)	Range: 0x00 ~ 0xFF (See Instruction Manual for complete list)
Up/Down Freq Ref	O2-05	0	O2-05	0	0: Disabled	0: Disabled
					1: Enabled	1: Enabled
Oper Detection	O2-06	1	O2-06	1	0: Disabled	0: Disabled
					1: Enabled	1: Enabled
Elapsed Time Set	O2-07	0	O3-01	0hr	--	
Elapsed Time Run	O2-08	1	O3-02	1	0: Power-On Time	0: Power-On Time
					1: Running Time	1: Running Time
Run @ Power Up	O2-10	0	--	--	0: Disabled	--
					1: Enabled	--
Clear History 1	O3-01	0	--	--	0: Not Clear	--
					1: Clear	--
Clear History 2	O3-02	0	--	--	0: Not Clear	--
					1: AC Count Clr	--
					2: OL/LC Count Clr	--
					3: Both Count Clr	--
					4: U1-54 Clear	--

G+ & VG+ Series 2 to Series 4 Product Transition Guide

Data subject to change without notice.

MAGNETEK
MATERIAL HANDLING

Magnetek, Inc.
N49 W13650 Campbell Drive
Menomonee Falls, WI 53051

Distributed by Ergonomic Partners
Sales@ErgonomicPartners.com
www.ErgonomicPartners.com
Tel: (314) 884-8884

Document Number: 144-23911
August 2011
Magnetek, Inc. ©